Power System Analysis Using the Electromagnetic Transients Program

EMTP

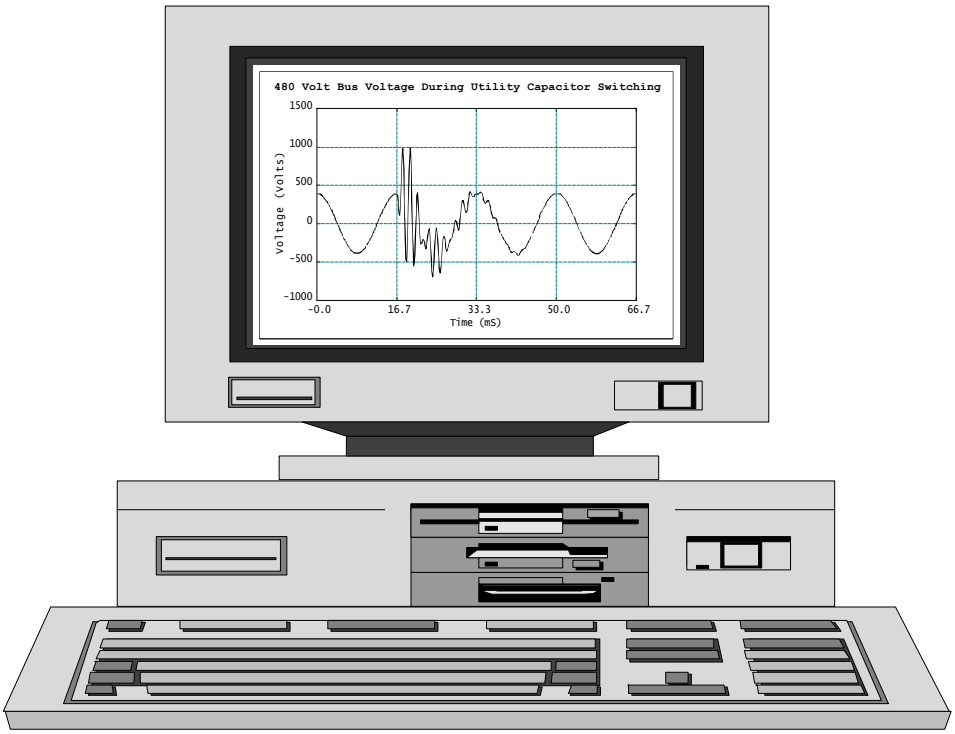

EMTP Case Study Workbook

April 2000

EMTP Case Study Workbook

Prepared by

Electrotek Concepts, Inc.

408 North Cedar Bluff Road, Suite 500
Knoxville, Tennessee 37923
(865) 470-9222 FAX (865) 470-9223
http://www.electrotek.com/

Principal Investigator:

Thomas Grebe

April 2000

This workbook provides documentation of case studies for the Electromagnetic Transients Program (EMTP). This workbook was developed by Electrotek Concepts, Inc. Information contained in this document is subject to change without notice and Electrotek assumes no responsibility for any damages resulting from use of the information contained within.

Copyright © 1992 - 2000 Electrotek Concepts, Inc. All rights reserved

EMTP Case Study Workbook

Overview

The Electromagnetic Transients Program (EMTP) is a computer program used to simulate electromagnetic, electromechanical, and control system transients on multi-phase electric power systems. It was first developed as a digital computer counterpart to the analog Transient Network Analyzer (TNA). Many other capabilities have been added to the original program over a 30 year period, and the program has become widely used in the electric utility industry.

Traditionally, the program has existed only in mainframe and minicomputer environments, thus limiting usage to engineers and companies with access to these facilities. However, The EMTP is now available for use on IBM and compatible personal computers (PCs) using the IBM OS/2 and Microsoft Windows operating systems.

To support users of the PC versions of the EMTP, The EMTP Case Study Workbook series has been developed. The workbook series includes an introduction to the EMTP, overview of the EMTP-PC, summary of data preparation, and numerous case studies illustrating various power system transient events. The workbook series is not meant to replace any existing EMTP documentation, but rather as a supplemental tool to be used to augment the EMTP education process.

This edition of the EMTP Case Study Workbook series is divided into four volumes:

Volume 1: EMTP Overview:

History of the EMTP, applications and capabilities of the EMTP, overview of the EMTP-PC Workstations (OS/2 and Windows).

Volume 2: System Modeling Techniques:

Summary of system modeling techniques, with emphasis on switching studies. Includes examples of data for EMTP elements and auxiliary (AUX) routines.

EMTP Case Study Workbook

Overview - continued

Volume 3: Utility Transmission and Distribution:

Introduction to lightning surge simulations, capacitor switching transients, the restrike transient, magnification at lower voltage capacitors, frequency scans, transients at transformer terminations. Case studies illustrating line and transformer energizing, ferroresonance, statistical simulations, motor starting, and steady-state phenomena.

Volume 4: Power Quality and Power Electronics:

Overview of TACS for power electronic modeling. Case studies for power electronic devices, such as rectifiers, inverters, drives, and SVCs. Evaluation of power quality related events such as nuisance tripping of adjustable-speed drives.

It is suggested that a new user read through volumes 1 and 2 and then work through the case studies provided in volumes 3 and 4. In addition, users should refer to the EMTP Rule Books, Workbooks, and Application Guide, if questions arise while completing the simulations.

The case studies provided in the workbook series are intended to involve the user in an active learning process. Each case study describes the phenomena of interest, illustrates the preparation of input data, and presents selected output. In addition, suggested exercises are provided so the user can more conveniently experiment with the cases.

The structure of the workbook series is based on presentation of the material at EMTP Case Study Workshops or at personalized in-house training sessions. The upper portion of each page illustrates the slide used by the instructor, while the lower portion of the page is reserved for supplemental notes and comments.

Power System Analysis Using the Electromagnetic Transients Program

EMTP

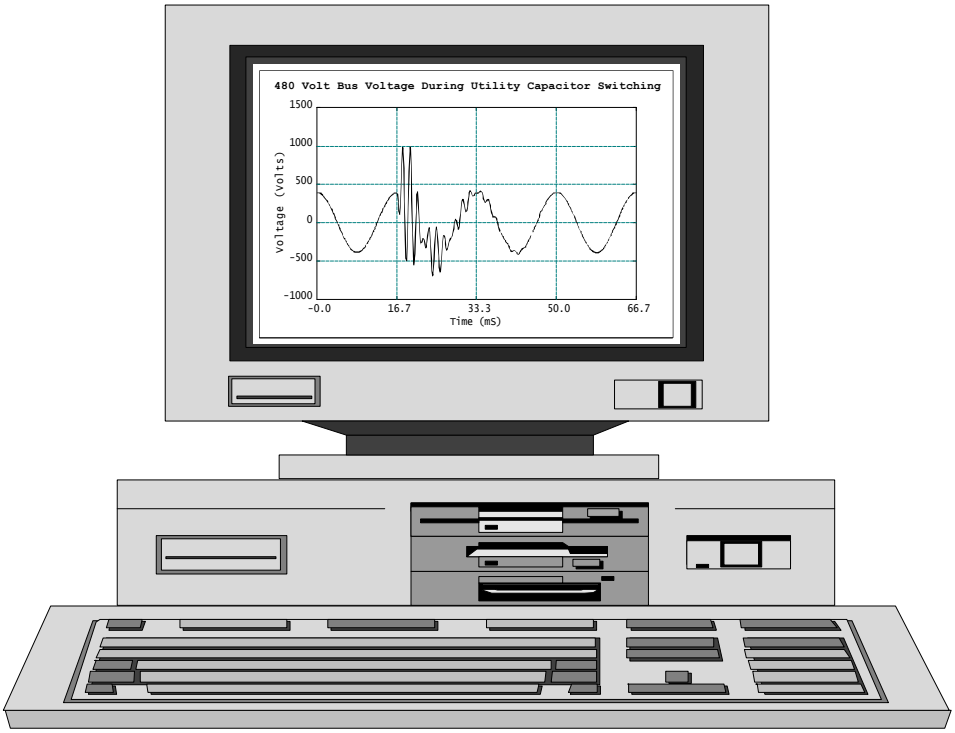

EMTP Case Study Workbook

Volume 1 - EMTP Overview

April 2000

EMTP Overview

History of the EMTP:

- The Electromagnetic Transients Program (EMTP) was originally developed in the late 1960's by Hermann Dommel
- Original goal of BPA (Dr. Dommel joined BPA in 1966) was to replace the need for the Transient Network Analyzer (TNA)

EMTP Overview *Volume 1, Slide 2*

The Electromagnetic Transients Program (EMTP) is a general purpose computer program for simulating high-speed transient effects in electric power systems. The program features an extremely wide variety of modeling capabilities encompassing electromagnetic and electromechanical oscillations ranging in duration from microseconds to seconds. Examples of its use include switching and lightning surge analysis, insulation coordination, shaft torsional oscillations, ferroresonance, and HVDC converter control and operations.

The program initially comprised about 5000 lines of code, and was useful primarily for transmission line switching studies. As more uses for the program became apparent, BPA coordinated many improvements to the program. As the program grew in versatility and in size, it likewise became more unwieldy and difficult to use. One had to be an EMTP aficionado to take advantage of its capabilities.

EMTP Overview - cont

History of the EMTP - cont:

- EMTP Development Coordination Group (DCG) formed in early 1980's to organize future EMTP development
- Electric Power Research Institute (EPRI) joined effort in 1983 primarily to develop/revise EMTP documentation and educate new users

EMTP Overview *Volume 1, Slide 3*

The EMTP Development Coordination Group (DCG) comprises the Canadian Electrical Association (utility members), Hydro Quebec, Ontario Hydro, Western Area Power Administration, United States Bureau of Reclamation, ABB Power Transmission (associate member), and Central Research Institute, Electric Power Industry-Japan (associate member). In addition to the Electric Power Research Institute (EPRI), Electricite dc France (EDF)and the American Electric Power Service Corporation (AEP) participate in EMTP development as EPRI associate members.

Version 1.0 of the DCG/EPRI EMTP was released in 1987 and Version 2.0 was completed in mid 1989. Version 2.0 included a number of enhancements including: multi-frequency initialization, multi-port frequency dependent network equivalent, circuit breaker model, and new air-gap and arrester models.

EMTP Overview - cont

History of the EMTP- cont:

- University of Wisconsin-Madison holds yearly courses for beginner and intermediate level users
- The EPRI/DCG EMTP User's Group is presently being coordinated by Ontario Hydro.
- Harmonic and transient analysis application support is also provided by the PATH User's Group (Electrotek).

EMTP Overview *Volume 1, Slide 4*

University of Wisconsin - Madison Short Course

Introduction to the EMTP
Switching Surges and Insulation Coordination
Transformers and Machines
Component Models Using TACS

For additional information, please contact:

Professor Willis Long
Department of Engineering Professional Development
University of Wisconsin-Madison
432 North Lake Street
Madison, Wisconsin 53706 Phone: (608) 262-1199

Transient Analysis Options

Transient simulations are often performed using an Electromagnetic Transients Program, including:

- DCG/EPRI EMTP
  - Available from: EPRI / CEA / DCG Members
- PSCAD™ / EMTDC™
  - Available from: Manitoba HVDC Research Center
- ATP (Alternative Transients Program)
  - Available from: Can/Am EMTP User's Group
- MicroTran
  - Available from: Microtran Power System Analysis Corporation

EMTP Overview *Volume 1, Slide 5*

Brief History:

- The Electromagnetic Transient Program (EMTP) was originally developed in the late 1960's by Hermann Dommel.
- Original goal of BPA was to replace the need for the Transient Network Analyzer (TNA).
- The need for accurate representation and analysis of power systems has continued to drive program development.
- A number of suppliers and platform options are now available, with significant emphasis being placed on the personal computing environment.

Applications of the EMTP

- Switching Surges
  - Deterministic
  - Probabilistic
  - Single-pole reclosing
  - High-speed reclosing
  - Capacitor switching
  - Transient recovery voltage (TRV)
  - Cable switching transients

EMTP Overview *Volume 1, Slide 6*

Studies involving use of the EMTP have objectives which fall in two general categories. One is design, which includes insulation coordination, equipment ratings, protective device specification, control systems design, etc. The other is solving operating problems such as unexplained outages or equipment failures.

Applications of the EMTP - cont

- Lightning Surges
  - Backflash
  - Induced surges
  - Incoming surges at stations
- Insulation Coordination
  - Overhead lines
  - Gas-insulated substations
  - Arrester duty
  - Outdoor stations

EMTP Overview *Volume 1, Slide 7*

Applications of the EMTP - cont

- Shaft Torsional Stress
  - Subsynchronous resonance
  - Switching induced
  - Torsional fatigue life analysis
- High Voltage DC (HVDC)
  - Controls
  - Electrical transients
  - Harmonics

EMTP Overview *Volume 1, Slide 8*

Applications of the EMTP - cont

- Carrier Frequency Propagation
- Harmonics
  - Frequency Response Characteristic
  - Current and Voltage Distortion Concerns
- Ferroresonance
- Parallel Line Resonance
- Motor Starting
- Alternate Energy Sources

EMTP Overview *Volume 1, Slide 9*

Applications of the EMTP - cont

- Static VAr Compensation
  - Controls
  - Overvoltages
  - Harmonics
- Grounding / Ground Wire Losses
- Phase Conductor Transposition
- General Steady-State Analysis of Unbalanced Systems
- Power Quality

EMTP Overview *Volume 1, Slide 10*

Modeling Capabilities of the EMTP

- Linear Power System Elements
  - Simple resistive, inductive, and capacitive elements
  - Overhead transmission lines
  - Underground cables
  - Power transformers
  - Simple voltage and current sources
  - Three-phase synchronous machines
  - Universal machines (synchronous/dc/induction)
  - Simple switches

EMTP Overview *Volume 1, Slide 11*

The EMTP is used to solve the ordinary differential and/or algebraic equations associated with an "arbitrary" interconnection of different electrical and control system components.

The implicit trapezoidal-rule (second order) integration is used on the describing equations of most elements which are modeled by ordinary differential equations. The results is a set of real, simultaneous, algebraic equations which is solved at each time-step. These equations are written in nodal-admittance form, and are solved by ordered triangular factorization.

Modeling Capabilities of the EMTP - cont

- Nonlinear Power System Elements
  - Surge arresters and protective gaps (SiC, MOV)
  - Transformer saturation (hysteresis)
  - Machine saturation
  - Circuit breaker arcs
- Frequency Dependent Network Equivalents

EMTP Overview *Volume 1, Slide 12*

Modeling Capabilities of the EMTP - cont

- Transient Analysis of Control Systems (TACS)
  - Transfer functions (s-blocks)
  - Limiters
  - Signal sources (e.g. ramp, pulse)
  - FORTRAN expressions
  - "Built-In" devices (e.g. frequency sensor, etc)

EMTP Overview *Volume 1, Slide 13*

TACS is an acronym for Transient Analysis of Control Systems, an EMTP modeling capability which grew out of Laurent Dube's doctoral research (conducted under Prof. Dommel at UBC).

TACS was designed as a simulation tool that functions in ways similar to analog computers, differential analyzers, and algebraic and logical processors combined. TACS signals and EMTP electrical-network variables can be interfaced, to form a hybrid EMTP-TACS interactive configuration. The original goal of TACS was the simulation of HVDC controls.

EMTP Workstation Structure

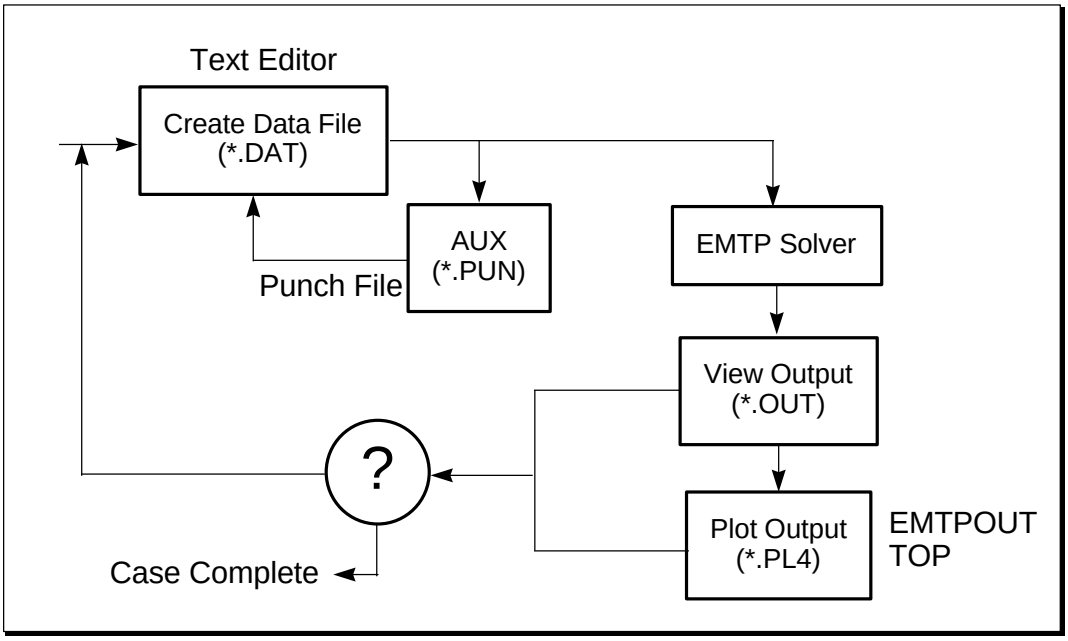

EMTP Overview *Volume 1, Slide 14*

The process for completing a transient simulation consists of first collecting and developing the necessary data to represent the circuit to be modeled. Often this system representation is completed by "describing" the interconnection and component values in a simple ASCII text file. This text file method is a hold-over from earlier times, when the data was read line-by-line with a card reader.

After the data file (.DAT) has been created, it is submitted to the EMTP solver. The solver reads the data file, line-by-line, and reports any significant errors (to be discussed in greater detail in an upcoming section). Satisfied that the case will solve the EMTP generates a matrix representation of the interconnected system. Typically, solution of both a steady-state case and a transient case occur.

There are two forms of EMTP output available for viewing. First, an ASCII text output (.OUT) file is produced. This file contains a summary of how the EMTP interpreted the input data file (useful for debugging component values), a connectivity table, full output of the steady-state case, and the requested output for the transient case. This transient output is also stored in a binary file (.PL4) for post processing and viewing.

Program Inputs

- Time step size, length of time to be simulated
- Lumped branch data - resistance, inductance, capacitance
- Traveling wave models for transmission lines
- Nonlinear elements (current/voltage or current/flux points)
- Synchronous machine models
- Control system information (TACS)
- Desired outputs

EMTP Overview *Volume 1, Slide 15*

EMTP requires input data to describe the electrical network, control system information, initial conditions, the simulation case (time step size, duration of simulation), and the output requirements. The electrical network data is based on individual elements (lines, transformers, capacitors, etc.). Detailed descriptions of the data requirements for each element supported and the other data case requirements are provided in the EMTP user's guide.

"Template Method":

```
C
C 500 kV Capacitor Bank #1 - 367.5 MVAr
C
C <---Nodes--><---Refer--><-ohms<---mH<---uF<--------------------------------Out
C <-Bus1<-Bus2<-Bus3<-Bus4<----R<----L<----C                                  V
   CAP1A                                3.889
   CAP1B                                3.889
   CAP1C                                3.889
C .....^.....^.....^.....^.....^.....^.....^.....................................^
C
```

Program Outputs

- Steady State Phasor Solution - branch voltages and currents, bus voltages, power loss, and power flows.
- Data points for bus voltages, branch voltages, branch currents, branch energy dissipation, machine variables, and control system variables.
- Voltage magnitudes and angles as a function of frequency
  (frequency scan option)
- Statistical summary data for statistical cases

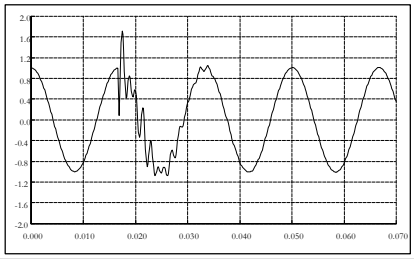

EMTP Overview *Volume 1, Slide 16*

The main output of an EMTP simulation consists of the magnitude vs. time points for node voltages (illustrated in the above figure), differential voltages (node-node), and branch currents. Other outputs from the transient case can also be calculated by EMTP (energy, power, etc.) but it is generally easier to let the output processing program generate these supplemental signals from the actual voltage and current data.

The program performs a full steady state solution to develop initial conditions for the linear elements in the model. The initial conditions used for nonlinear elements depend on the specific model involved. The output from the steady state solution is also available in different levels of detail and can be very useful for debugging the model.

IEEE Connection

- 1991 IEEE Summer Power Meeting:
  - Formation of ***Modeling and Analysis of System Transients Using Digital Programs*** Working Group.
  - Objectives:
    - » Classification of various system studies & documentation of solved problems.
    - » Documentation of requirements for individual component and system models.
    - » Analysis of discrepancies between field measurements and corresponding simulations.
    - » Recommendations for future development of electromagnetic transient programs.

EMTP Overview *Volume 1, Slide 17*

IEEE Connection - continued

- Number of task forces were developed to address component and system modeling guidelines:
  - **Power Electronics**
  - **Low Frequency Transients**
  - **Switching Transients**
  - **Fast Front Transients**
  - **Very Fast Transients**
  - **Protection and Controls**

IEEE Connection - continued

- The group maintains a bibliography; has published a number of papers; and has sponsored several panel sessions.
- Future goal includes development of a special publication and corresponding tutorial session.

IPST

- The ***International Conference on Power Systems Transients*** (IPST) offers a platform for the exchange of scientific and technical information related to electromagnetic transients in electric power systems.
- Contributors are sought on all topics related to the study of transient phenomena in electric energy systems.
- This includes, but is not limited to, computer simulations, transient network analyzer studies, and field measurements.

EMTP Overview *Volume 1, Slide 20*

Suggested Topics

Components:

- Transmission Lines
- Cables
- Surge Arresters
- Electric Machines and Drives
- HVDC, SVC and FACTS
- Control Systems

Studies:

- SSR Phenomena
- Temporary Overvoltages
- Switching Surges
- Lightning Surges
- Very-Fast Transients
- AC-DC Interactions
- system protection

IPST - continued

- IPST was created with the goal of promoting the study of power systems transients by offering a platform of scientific and technical excellence for its presentation. As an open conference, it is intended to be a forum for the scientific community involved in all topics related to the study of transient phenomena in electric energy systems.
- IPST '95, which was held in Lisbon on September 3-7 1995, was hosted by Instituto Superior Tecnico (IST) of the Technical University of Lisbon.
- More information at:
  `http://www.electrotek.com/ipst/ipst.htm`

Suggested Topics

Data:
- Measurements
- Approximations
- Verification
- Simplification
- Comparisons

Modeling:
- Modeling Decisions
- Modeling Mistakes
- Modeling Shortcuts
- Modeling Instruction

References

H. W. Dommel, W. S. Meyer, "Computation of Electromagnetic Transients", Proceedings of the IEEE, Vol 62, No. 7, July 1974.

Willis Long, et. al., "EMTP A Powerful Tool for Analyzing Power System Transients", IEEE Computer Applications in Power, Volume 3, Number 3, July 1990, pp. 36-41.

John Douglas, "Designing for Disaster," EPRI Journal, October-November, 1989.

Thomas Grebe, et. al., "Announcing the EMTP User's Group," Transients, Spring 1991.

Rambabu Adapa, "EPRI Funds New PC Workstations," Transients, Winter 1992.

Power System Analysis Using the Electromagnetic Transients Program

EMTP

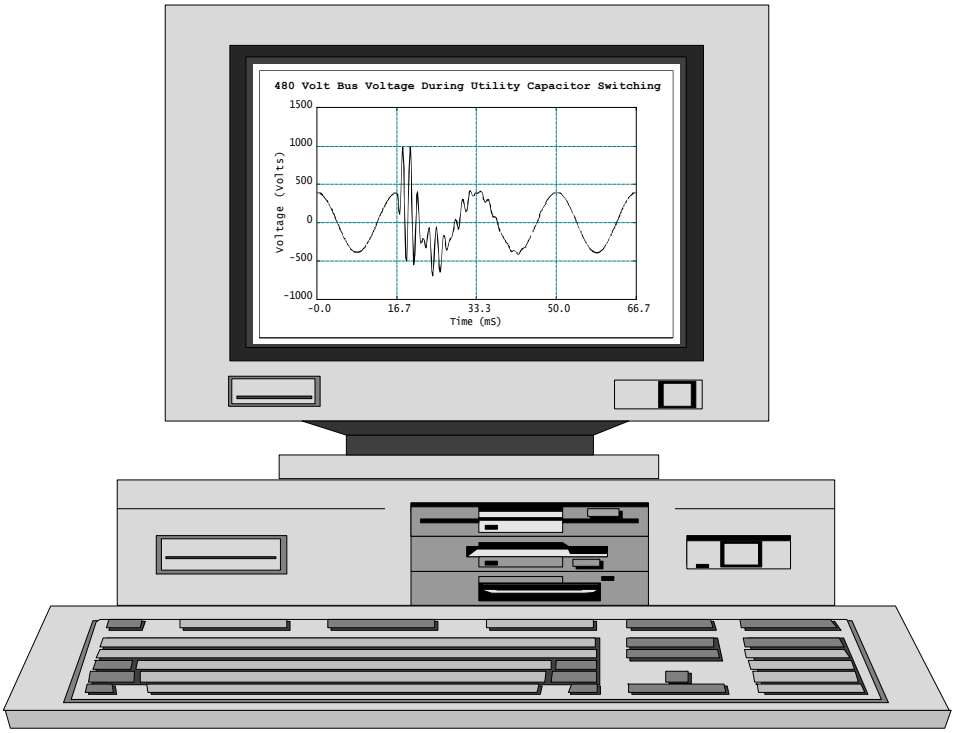

EMTP Case Study Workbook

Volume 2 - System Modeling Techniques

April 2000

Table of Contents:

System Modeling Techniques	3
Modeling Linear Power System Elements	23
Modeling Nonlinear Elements	54
Modeling Switches	72
Modeling Sources	84
Modeling Induction Motors	85
Introduction to TACS	95
EMTP Data Modules	118

List of Related EMTP Data Files:

MOV Arrester Auxiliary Routine.	ARRDAT.DAT
Hysteresis Auxiliary Routine	HYSDAT.DAT
Transformer Saturation Auxiliary Routine	CONVERT.DAT
3-Phase Transformer Auxiliary Routine #1	TRELEG.DAT
3-Phase Transformer Auxiliary Routine #2	BCTRAN.DAT
3-Phase Transformer Auxiliary Routine #3	BCTRAN2.DAT
Line Constants Auxiliary Routine #1	LPARAM.DAT
Line Constants Auxiliary Routine #2	CP-LINE.DAT
Line Constants Auxiliary Routine #3	PI-EXACT.DAT
Line Constants Auxiliary Routine #4	FD-LINE.DAT
Frequency Scan Test Case	SCANSRC.DAT
EMTP Data Module (Make File)	MAKE_MOD.DAT
Data Module Test Case (Restrike)	STRIKEMOD.DAT
Type 4 Induction Motor Setup	IMTYPE4.DAT
Type 40 Induction Motor Setup	TYPE40.DAT, IMTYPE40.DAT

System Modeling Techniques

- Equivalent Source Impedance
  - Mutually coupled R-L, Type 51,51,53... (Rule Book - 6.3.2)
- Capacitor/ Filter Bank
  - Lumped element, Type 0 (6.1.2)
- Transmission Line
  - PI equivalent, Type 1,2,3... (6.2.2)
  - Frequency independent distributed parameter, Type -1,-2,-3... (7.3.1)
  - Frequency dependent distributed parameter, JMARTI (7.4.1)

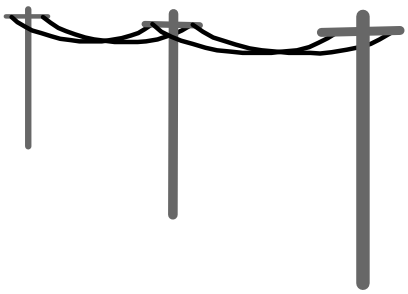

System Modeling Techniques *Volume 2, Slide 3*

System Modeling - cont

- Transformers
  - Single-phase saturable transformer, Type TRANSFORMER (6.4.2)
  - Mutually coupled R-L (TRELEG), Type 51,52,53... (6.3.2)
  - Three-phase coupled R-L (BCTRAN), Type 1,2,3... (6.2.2)
- Transformer Saturation
  - Saturable transformer model, Type TRANSFORMER (6.4.2)
  - Pseudo-nonlinear reactor, Type 98 (8.4.2)
  - Pseudo-nonlinear hysteretic reactor, Type 96 (8.5.2)

System Modeling Techniques *Volume 2, Slide 4*

System Modeling - cont

- Arresters
  - Single exponential MOV, Type 92 (8.9.2)
  - Multi exponential MOV, Type 92 (8.9.2)
  - Gapped SiC, Type 92 (8.8.2)

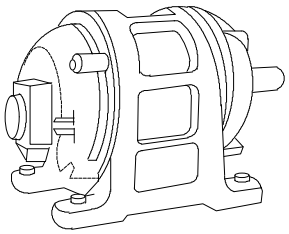

- Loads
  - Lumped element, Type 0 (6.1.2)
  - Psuedo-nonlinear resistance, reactor, Type 99,98 (8.3.2,8.4.2)
  - Frequency Dependence (damping of system elements)

System Modeling Techniques *Volume 2, Slide 5*

Suggested Study Procedure

- ☑ Define Study Objectives
- ☑ Determine Outputs Required
- ☑ Determine Frequency Range of Phenomena to be Studied
- ☑ Determine Extent of System to be Modeled
- ☑ Draw Connection Diagram and Label Buses
- ☑ Collect Input Data for Component Models
- ☑ Run Steady-State Solution and Complete Verification
- ☑ Estimate Expected Simulation Results (Hand-Calcs)
- ☑ Run Cases Required to Complete Study

System Modeling Techniques *Volume 2, Slide 6*

One of the most important problems associated with developing a system model is "How much of the system do I need to model?". Unfortunately, there are no rules to guide a user, it is often more of a feel that is developed over time.

A good starting point for switching studies is to model one or two buses back from the switched bus. However, even this simple guideline fails from time-to-time. Perhaps the best method for determine the appropriate system model is to start with a small simple circuit that accurately represents the phenomena, and then add more of the system details to determine their impact on the solution result.

Another factor in the system modeling question, it model/simulation accuracy. Very often the goal of the study will determine the model complexity:

Modeling Accuracy

- High accuracy is required for:
  - Comparison with measured quantity
  - Failure analysis
- Conservative approach (reasonable results) is acceptable for:
  - Insulation coordination
  - Device duty evaluation
  - Parametric study for a general trend
- Accuracy is less important for:
  - Typical waveform generation
  - Phenomena illustration

System Modeling Techniques *Volume 2, Slide 7*

Some factors affecting system simplification include:

- model development and simulation time
- requirements of simulation program (i.e. number of buses)
- problem definition
- accuracy of system equivalents

In general, system simplification will always occur. It is the users responsibility to verify the model after each step and increase the model size only when necessary.

System Simplification

- Simplification is always required:
  - Model development and simulation time
  - Requirement of simulation program (i.e. # buses, etc.)
- Simplification without loss of accuracy:
  - Define the problem well
  - Start with a simple model
  - Use equivalents to represent less important portions of the system
  - Verify model after each step and increase size only when necessary

System Modeling Techniques *Volume 2, Slide 8*

Structure of EMTP Input Data

- BEGIN NEW DATA CASE
  - Miscellaneous Data Cards
  - TACS (BLANK)
  - Linear / Nonlinear Branches (BLANK)
  - Switches (BLANK)
  - Sources (BLANK)
  - Initial Conditions
  - Node Voltage Output Requests (BLANK)
- BLANK END OF DATA CASE

System Modeling Techniques *Volume 2, Slide 9*

Commonly used EMTP terms:

Term	Meaning
Deck	Data file
Card Image	Line in data file
Blank Card	Blank line (or BLANK) in data
Punch File	Output from AUX - ready for EMTP

Alternate Method - Data Grouping

- Grouping of EMTP data is accomplished using "/" cards:
  - Method allows data to be grouped logically, rather than with the traditional EMTP structure:

```
Miscellaneous Data Cards
Branch Data
BLANK End of Branch Data
Switch Data
Blank End of Switch Data
etc.
```

  - Allows large complex data sets (i.e. PWM inverter/motor) to be divided into smaller more manageable groups of data.
  - Six levels of nesting are allowed in data modules.

System Modeling Techniques *Volume 2, Slide 10*

Data sorting - "/" cards:

/BRANCH	indicate branch data
/SWITCH	indicate switch data
/SOURCE	indicate source data
/TACS	indicate TACS data
/OUTPUT	indicate output data
/PLOT	indicate plot data
/REQUEST	indicate special request card
/STATISTICS	indicate statistics request cards
/END MODULE	indicate end of a data module

Considerations for Data Preparation

- Time Step - Δt
- Simulation Time - T_{max}
- Units for Parameters - Ωs vs. mH, etc.
- Data Scaling (per-unit vs. TNA type vs. physical units)
- Network Connection Diagram
- Bus Names (- - - - - -)
- Fortran Data Format Specification (xx.xx)

System Modeling Techniques *Volume 2, Slide 11*

It is important to use a consistent set of units when developing EMTP data. Many times, the data provided (nameplate, customer, etc.) will not be in the format for entry into an EMTP data file. Data conversion is one of the most important parts of the simulation process, due to the fact that the results will only be as good as the data entered. In general, there are three options for data file preparation.

- Per-Unit - per-unit impedances can be used in the EMTP if case is taken that all the values are on the same MVA base and that transformer turns ratios are properly represented.
- TNA Type - this method is similar to the method used with Transient Network Analyzers (TNA). The data is converted to physical impedances on a common voltage base and all transformer line-to-line turns ratios are 1:1.
- Physical Units: this method is the most common and causes the least confusion in interpreting the results. The data is converted to physical impedances at the appropriate bus voltages and transformer turns ratios correspond to the physical voltage transformation ratios.

Time Step (Dt) Selection

- Obtain Shortest Travel Time for Lines and Cables

  $\tau = \frac{}{\nu}$ $\qquad \Delta t \le \tau/10$

- Determine Period of Oscillation for each LC Loop

  $T = 1/f = 2\pi\sqrt{LC}$ $\qquad \Delta t \le T/10$

- Find RC and L/R Time Constants for Lumped Elements

  $\Delta t < t_{RC}$ $\qquad \Delta t < t_{L/R}$

- Harmonics and Other Steady-State Phenomena

  $\Delta t \approx 50\mu Sec$

System Modeling Techniques *Volume 2, Slide 12*

Selection of the time step is one of the most important decisions an EMTP user must make. Improper time step selection is analogous to selecting a monitoring device that samples a waveform at a slow enough rate that the transient of interest is partially or completely missed.

There needs to be a balance between computational effort and accuracy when the time step is selected. The selection, much like the modeling question, is more of a feel then a hard and fast rule. As a rule of thumb, the guidelines summarized above should be used to estimate the initial time step.

Suggestion: Select Δt, then run a second case with $\Delta t/2$ and compare results.

Time Step "Error"

- An illustration of inaccurate time step selection is illustrated below. Two capacitor switching cases were run with exactly the same circuit configuration. The only change was increasing the time step from 20msec to 200msec.

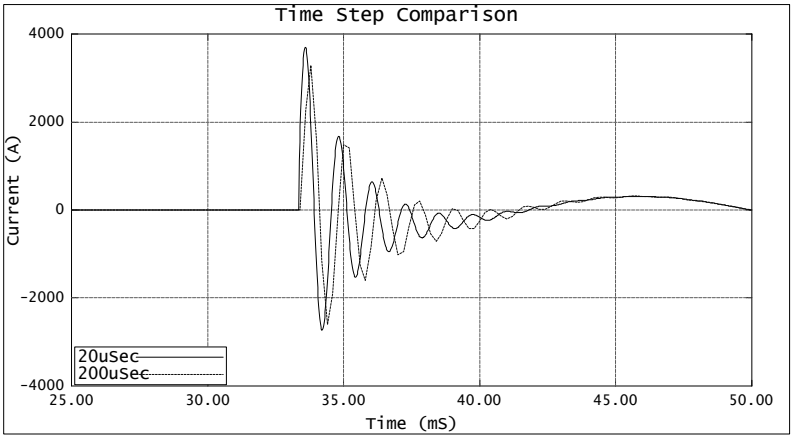

System Modeling Techniques *Volume 2, Slide 13*

The user can test the accuracy of the time step selection by running a second case with dt/2 (half time). If the results of the new simulation are comparable with the original case, the selection was reasonable. If however they are not, the user should consider repeating the test again to iterate to a usable time step value.

Selection of Simulation Length

- The length of the simulation **(Tmax)** also affects the computational effort. Tmax should be selected to provide the following:
  1. At least one cycle of pre-transient power frequency voltage for slow to medium frequency events (several cycles of post transient may also be desirable for view the event).
  2. At least 10 to 20 cycles of dominate transient frequency (to observe damping rates and to ensure that resonances do not occur).
  3. One to five seconds for machine dynamics.
  4. Sufficient time for one transient event to decay before beginning another. For example, a preinsertion contact may take 10 cycles to close in reality. However, if the transient waveform has decayed in three cycles, there would be no reason to delay the second event the full 10 cycles.
  5. Time to accurately represent control system dynamics.

$$\#_{steps} = \frac{T\max}{\Delta t}$$

System Modeling Techniques *Volume 2, Slide 14*

Numerical Oscillation

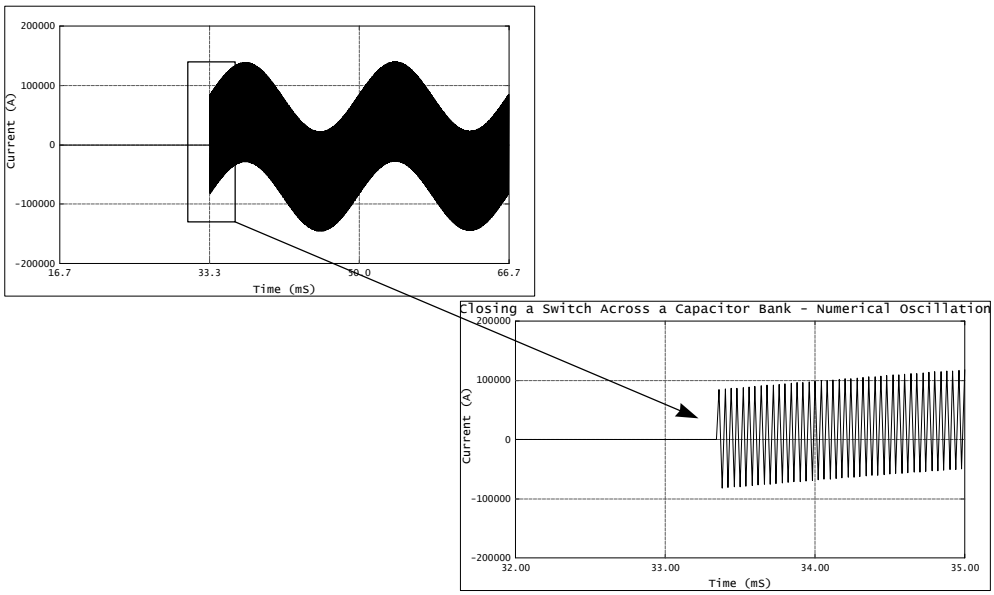

System Modeling Techniques *Volume 2, Slide 15*

Elimination of Numerical Oscillation

- Causes of numerical oscillation include:
  - di/dt changes suddenly in an inductance (switch opening)
  - dv/dt changes suddenly in a capacitance (switch closing)
  - characterized by triangular waveform.

$$R_{d\,parallel} = \frac{L}{\alpha \Delta t} \qquad R_{d\,series} = \alpha \frac{\Delta t}{2C}$$

$\alpha \approx 0.15$

System Modeling Techniques *Volume 2, Slide 16*

Debugging the Simulation Model

- The EMTP Rule Book contains brief descriptions of all of the error messages generated by the program. If the cause of the error is not obvious, or if the case runs but yields incorrect results, the following steps may be taken:
  1. Check each entry of the network connectivity table (.OUT file) against each element in the oneline diagram.
  2. Check the EMTP input echo (.OUT file) and the parameter interpretations on the left side of the printout.
  3. Verify node names against connectivity listing. Pay special attention to right-justified, left-justified conflicts.
  4. Check the steady-state case solution against known (hand-calcs) quantities.
  5. Verify the number of BLANK cards in the data case. Data may be misinterpret as another type if the number is incorrect.
  6. Repeat the case after removing machines, frequency-dependent line models, surge arresters, nonlinear inductances and TACS elements.
  7. Repeat the case with a smaller time step.

System Modeling Techniques *Volume 2, Slide 17*

Verify node names against connectivity listing. Pay special attention to right-justified, left-justified conflicts. For example:

```
    BUS1       BUS1
  .....^  and .....^ do not refer to the same node.
```

Note: EMTP cases have been know to fail for a number of non-program related problems. A few of which are list below:

- mis-aligned data due tab characters in the file.
- no space after the “C” in a comment line. Correct comment is “C “.
- “O” instead of “0” (letter instead of number).
- “.” instead of “,” (period instead of comma).

"Kill Codes"

- The error messages produced by the EMTP are referred to as "kill codes". A complete listing of these messages may be obtained by running the simple data case:

```
BEGIN NEW DATA CASE
C
C                                <--KILL1<--KILL2
KILL CODES                              1     227
C ....................................^.......^
BLANK END OF ALL DATA CASES
```


Very often, the kill codes provide very little useful information to help the user understand and identify the problem. For example, the following kill code message does indeed inform the user that the error occurred because the first miscellaneous data parameter (DELTAT - time step) has a value of zero. However, this same error message may have occurred with a positive value for DELTAT and the incorrect number of BLANK cards. It is the user's responsibility to determine which data file problem created the error message, and not the other way around.

```
ERROR/ERROR/ERROR/ERROR/ERROR/ERROR/ERROR/ERROR/ERROR/ERROR/ERROR/ERROR/ERROR/ERROR/ERROR/ERROR/ERROR/ERROR/ERROR
ERROR/ERROR/ERROR/ERROR/ERROR/ERROR/ERROR/ERROR/ERROR/ERROR/ERROR/ERROR/ERROR/ERROR/ERROR/ERROR/ERROR/ERROR/ERROR
-----------------------------------------------------------------------------------------------------------------
YOU LOSE, FELLA.   THE EMTP LOGIC HAS DETECTED AN ERROR CONDITION, AND IS GOING TO TERMINATE YOUR RUN.  THE FOLLOWING PRINTOUT MESSAGE SUMMARIZES THE
DATA DIFFICULTY LEADING TO THIS PROGRAM DECISION.  BY STUDYING THIS MESSAGE, THE PROBLEM  DATA,  AND THE RULES DELINEATED BY THE  840-PAGE EMTP RULE
BOOK,  IT IS HOPED THAT THE USER CAN RECTIFY THE PROBLEM.
IF STILL IN DOUBT AFTER SOME STUDY, COME SEE PROGRAM MAINTENANCE FOR ASSISTANCE.
WHERE AN OTHERWISE-UNIDENTIFIED CARD IS REFERRED TO, OR IS CALLED THE 'LAST' CARD, THIS MEANS THE MOST-RECENTLY-READ CARD OF THE INPUT DATA DECK.
THE 80-COLUMN CARD IMAGE IN QUESTION IS THE LAST ONE PRINTED OUT BEFORE THIS
TERMINATION MESSAGE.   A COPY FOLLOWS....KILL CODES                          2       4
              KILL CODE NUMBER                OVERLAY NUMBER          NEARBY STATEMENT NO.
                          2                          1                          -9999
TIME-STEP SIZE 'DELTAT' AS READ FROM COLUMNS 1-8 OF THE FIRST MISCELLANEOUS DATA CARD IS NOT POSITIVE.   THE
      USER PUNCHED A VALUE OF     0.0000E+00.   UNLIKE JULES VERNE, YOU ARE NOT ALLOWED TO STOP OR DECREASE TIME DURING A SIMULATION, MY FRIEND.
DON'T TRY RIDING OUT OF AN ACTIVE VOLCANO ON A RAFT FLOATING ON MOLTEN LAVA, EITHER, ALTHOUGH THAT'S ANOTHER STORY.
```

Model Verification

- The single most important tool that the user has for verifying the EMTP case results is a basic knowledge of power system transients. Field test results, technical papers, basic textbooks, and more experienced engineers can all help. Learning by doing can be very frustrating and applying the simulation results can be risky, when the user does not feel comfortable with the results of the study.
- When verifying the results of an EMTP case, the user should always check the input parameter interpretation and network connectivity table. The steady-state solution should be checked to verify known quantities, such as bus voltage, branch currents, etc.
- Pre-switching steady-state waveforms should be examined for characteristic harmonic content and the waveform should be allowed to reach a stable condition before any switching is done.

System Modeling Techniques *Volume 2, Slide 19*

The textbook by Allan Greenwood, Electrical Transients in Power Systems, is a useful reference and it is recommended that the user review the basics of the phenomena before attempting to simulate it with the EMTP.

Special Request Cards

- $DISABLE / $ENABLE

  EMTP will treat data between these cards as comments

- $LISTON / $LISTOFF

  EMTP will not interpret data between these cards (reduce output)

- $VINTAGE, x

  Allows user to choose between old and new data formats

- $INCLUDE

  EMTP switches to specified file to read input data

System Modeling Techniques *Volume 2, Slide 20*

$DIAGNOSTIC, M

Control of diagnostic printout (4.6)

$STOP

Terminates execution immediately

$OUTPUT WIDTH 80 or 132

Allows user to switch between 80 and 132 column output

Miscellaneous Data Cards

```
C ----dt<---Tmax<---Xopt<---Copt<-Epsiln<-Tolmat<-Tstart

C .....^.......^.......^.......^.......^.......^.......^
C -Iprnt<--Iplot<-Idoubl<-Kssout<-Maxout<---Ipun<-Memsav<---Icat<-Nenerg<-Iprsup

C .....^.......^.......^.......^.......^.......^.......^.......^.......^.......^
C <--Isw<--Itest<--Idist<--Aincr<-Xmaxmx<-Degmin<-Degmax<-Statfr<-Sigmax<--Nseed

C .....^.......^.......^.......^.......^.......^.......^.......^.......^.......^
C --Kchg<---Mult<---Kchg<---Mult<---Kchg<---Mult<---Kchg<---Mult<---Kchg<---Mult

C .....^.......^.......^.......^.......^.......^.......^.......^.......^.......^
```

Required miscellaneous data cards:

1st card:	always
2nd card:	always
3rd card:	when Ipun = -1 (vary the printout frequency)
4th card:	when Nenerg > 0 (statistical simulation)

Rule Book: 5.2

Notes related to EMTP-PC:

Icat must be 1 or 2 for PL4 file to be created and

$$\frac{\left(T_{MAX}/\Delta t\right)}{I_{PLOT}} < 8100(TOP), 4010(EMTPOUT)$$

Iplot < 1 to suppress plot (PL4) file

Frequency Scan Simulations

- Disable Voltage Sources
- Insert Current Source (Ampl = 1.0) at Bus Where Scan is Desired
- Short Source Impedance to Ground
- Insert Frequency Scan Card

```
C <-------------------><-Fstart<--Fincr<--Fstop
FREQUENCY SCAN              60.0    10.0  1500.0
C ...........^xxxxxxxxxx.......^.......^.......^
```

- Make Misc Data Parameter KSSOUT = 0

Rule Book: 5.1.29

System Modeling Techniques *Volume 2, Slide 22*

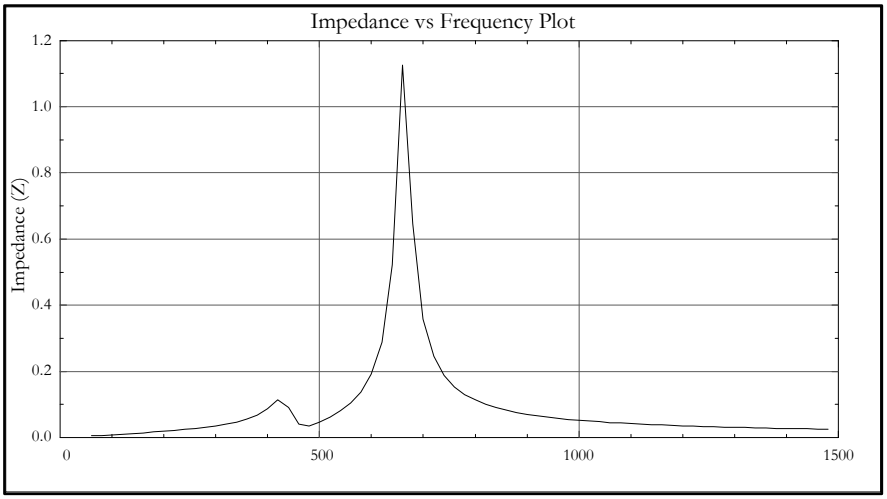

Modeling Linear Power System Elements

- Lumped series R, L, C elements
- Multiphase pi-sections
- Multiphase coupled R-L elements
- Built-in transformer model (can also include saturation)
- Cascaded pi-circuits

System Modeling Techniques *Volume 2, Slide 23*

Base Impedance:

$$Z_{base} = \frac{kV_{\phi\phi}^{\ 2}}{MVA_{3\phi}}$$

Self and Mutual Z:

$$Z_s = \frac{1}{3}\left(Z_0 + 2Z_1\right)$$

$$Z_m = \frac{1}{3}\left(Z_0 - Z_1\right)$$

Simple, Lumped, R-L-C Elements

R-L-C Branch:

```
C <---Nodes--><---Refer--><-Ohms<---mH<---uF<----------------------------Output
C Bus1->Bus2->Bus3->Bus4-><----R<----L<----C                                  V
  CAP01A                                 20.06                                2
C .....^.....^.....^.....^.....^.....^.....^xxxxxxxxxxxxxxxxxxxxxxxxxxxxxxxxxxx^
  CAP01B      CAP01A
C .....^.....^.....^.....^.....^.....^.....^xxxxxxxxxxxxxxxxxxxxxxxxxxxxxxxxxxx^
  CAP01C      CAP01A
C .....^.....^.....^.....^.....^.....^.....^xxxxxxxxxxxxxxxxxxxxxxxxxxxxxxxxxxx^
```

Example:

9.0 MVAr Capacitor Bank @ 34.5kV (wye/grounded)

$$X_C = \frac{kV\phi\phi^2}{MVAr_{3\phi}} = \frac{34.5^2}{9.0} = 132.25\Omega \qquad C = \frac{1}{\omega X_C} = \frac{1}{(2\pi 60)*132.25} = 20.06\mu F$$

Rule Book: 6.1.2

EMTP Column 80 Output Request:

1 Branch Current
2 Branch Voltage
3 Both Branch Current and Voltage
4 Branch Power and Energy

R-L-C, High Precision Format

R-L-C Branch:

```
$VINTAGE, 1
C <---Nodes--><----------><----------Ohms<--------------mH<-------------uF<--Out
C Bus1->Bus2-><----------><-------------R<--------------L<-------------C     V
   LOADA LOADB                        94.9          121.7
C .....^.....^xxxxxxxxxxxx..............^..............^..............^xxxxx^
   LOADB LOADC                        94.9          121.7
C .....^.....^xxxxxxxxxxxx..............^..............^..............^xxxxx^
   LOADC LOADA                        94.9          121.7
C .....^.....^xxxxxxxxxxxx..............^..............^..............^xxxxx^
$VINTAGE, 0
```

Example:

Three-Phase 5.0 MVA, 0.90 pf Load (RL) @ 13.2kV (Delta)

$$Z_{Load} = \frac{kV\phi\phi^2}{MVA_{1\phi}} = \frac{13.2^2}{5/3} = 104.5\Omega @ 25.8^\circ$$

$$Z_{Load} = 94.9 + j45.9\Omega$$

$$R = 94.9\Omega,\ L = 121.7\,mH$$

Rule Book: 6.1.4

PI-Circuit Branch

PI-Equivalent Branch:

```
C <---Nodes--><---Refer--><-Ohms<---mH<---uF
C <-Bus1<-Bus2<-Bus3<-Bus4<--R11<--L11<--C11
 1 BUS1A BUS2A             5.119 38.02 0.119
C .....^.....^.....^.....^.....^.....^.....^
C <-Bus1<-Bus2<---------><--R21<--L21<--C21<--R22<--L22<--C22
 2 BUS1B BUS2B             2.491 17.56 -0.02 5.119 38.02 0.119
C .....^.....^xxxxxxxxxxxx.....^.....^.....^.....^.....^.....^
C <-Bus1<-Bus2<---------><--R31<--L31<--C31<--R32<--L32<--C32<--R33<--L33<--C33
 3 BUS1B BUS2B             2.491 17.56 -0.02 2.491 17.56 -0.02 5.119 38.02 0.119
C .....^.....^xxxxxxxxxxxx.....^.....^.....^.....^.....^.....^.....^.....^.....^
```

Example:

9.75 Mile Section of 115kV Transmission Line

Z_1 = 0.204 +j0.583% @ 10MVA, Z_0 = 0.769+j2.085% @ 10MVA

Positive Sequence Line Charging = 0.6893 MVAr

$$R_{11} = \frac{1}{3}\left(R_0 + 2R_1\right) = \frac{1}{3}(10.170 + 2*2.698) = 5.1886\Omega$$

$$R_{21} = \frac{1}{3}\left(R_0 - R_1\right) = \frac{1}{3}(10.170 - 2.698) = 2.4907\Omega$$

Rule Book: 6.2.2

$$Z_{base} = \frac{115^2}{10} = 1322.5\Omega$$

$$C_1 = \frac{MVAr}{\omega kV^2} = \frac{0.6893}{(2\pi 60)115^2} = 0.1383\mu F$$

$$C_0 \approx 0.6C_1 = 0.6*0.1383\mu F = 0.0829\mu F$$

Source Impedance

Mutually Coupled R-L Branch:

```
C <---Nodes--><---Refer--><-Ohms<---------mH
C <-Bus1<-Bus2<-Bus3<-Bus4<----R<----------L
51  SRC1  SRCA              0.52       8.249
C .....^.....^.....^.....^.....^...........^  Zero Sequence
52  SRC2  SRCB              1.10      17.586
C .....^.....^xxxxxxxxxxxx.....^...........^  Positive Sequence
53
C .....^.....^xxxxxxxxxxxx.....^...........^
```

Example:

$$Z_{base} = \frac{kV^2}{MVA} = \frac{115kV^2}{10MVA} = 1322.5\Omega$$

$$Z_1 = 0.08 + j0.50\% \ @10MVA = 1.10 + j6.63\Omega$$

$$Z_0 = 0.04 + j0.24\% \ @10MVA = 0.52 + j3.11\Omega$$

Rule Book: 6.3.3

Source Impedance Data - EMTP RL-Circuit Format

Voltage:	115	kV	From Bus:	SRC1		To Bus:	BUS1	
	R	X		R	X			
Z1:	0.080	0.500	Z0:	0.040	0.240	% @	10	MVA
							1322.5 Ω	
	R	L		R	L			
Z1:	1.058	17.540	Z0:	0.529	8.419	Ω & mH		

Voltage:	115	kV	From Bus:	SRC1		To Bus:	BUS1	
I3P:	9880	-80.58	IPG:	12006	-80.51	Amps	10	MVA
	Amps	Deg		Amps	Deg		1322.5 Ω	
	R	L		R	L			
Z1:	1.100	17.585	Z0:	0.519	8.242	Ω & mH		

$$I_{3\phi} = \frac{1}{Z_1} \qquad I_{\phi G} = \frac{3}{2Z_1 + Z_0} \qquad Z_{base} = \frac{kV_{\phi\phi}^{\ 2}}{MVA_{3\phi}}$$

Source Impedance - Damping

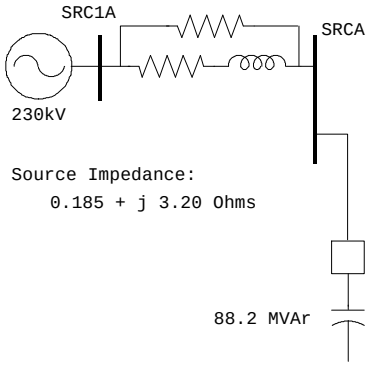

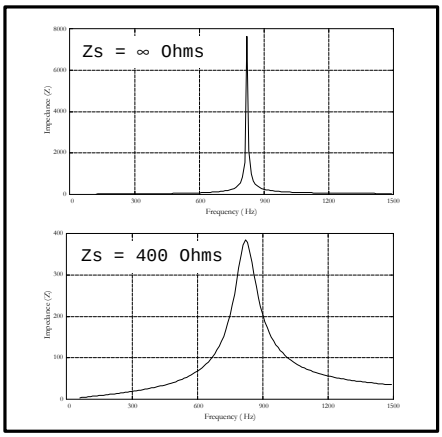

$$f = \frac{1}{2\pi\sqrt{LC}} = \frac{1}{2\pi\sqrt{(8.49\text{mH} * 4.42\mu\text{F})}} = 822\text{Hz}$$

Note: 400 Ω is approximate surge impedance of one 230kV transmission line

System Modeling Techniques *Volume 2, Slide 28*

Source Impedance - Damping - cont

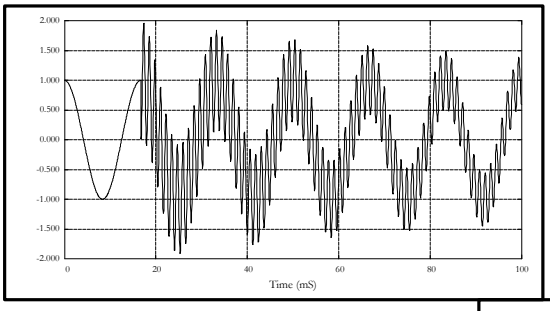

Capacitor Energizing Transient Voltage with $Z_s = \infty\ \Omega$

Capacitor Energizing Transient Voltage with $Z_s = 400\ \Omega$

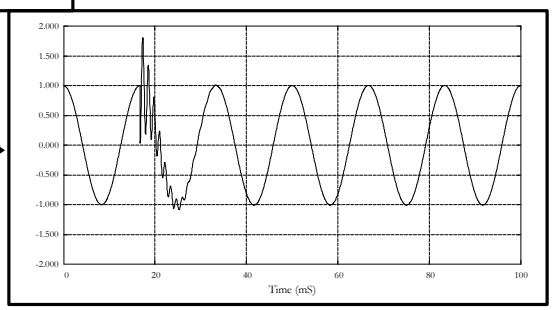

Source Impedance - Damping - cont

$$R = \sqrt{\frac{L}{C}} * \left(\frac{\pi}{\frac{1}{n} * \ln\left(\frac{V_1}{V_n}\right)} \right) = \sqrt{\frac{8.49\,mH}{4.42\,\mu F}} * \left(\frac{\pi}{\frac{1}{7} * \ln\left(\frac{188{,}000}{20{,}000}\right)} \right) = 430\Omega$$

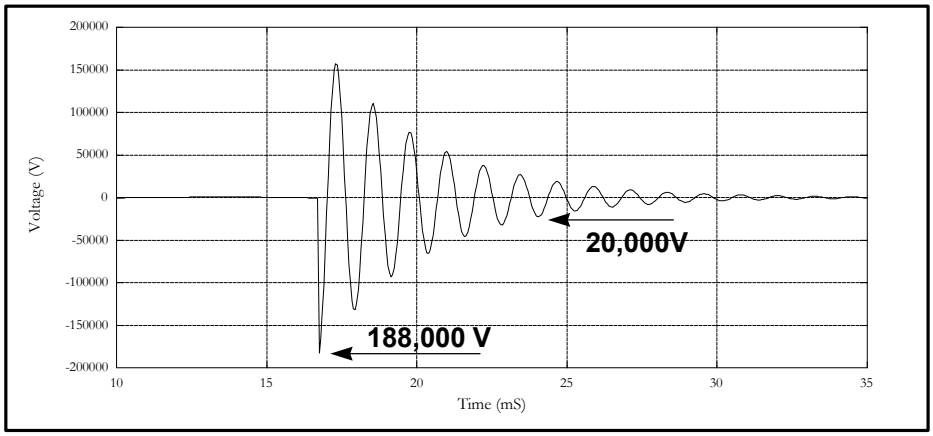

Transformer Modeling

- Built-in transformer model (can also include saturation)
  - Winding impedance and connections specified by user
- TRELEG
  - AUX Routine creates mutually coupled R-L element (type 51,52,53,... punch file for EMTP
- BCTRAN
  - AUX Routine creates three-phase coupled R-L (type 1,2,3,... punch file for EMTP

System Modeling Techniques *Volume 2, Slide 31*

Saturable Transformer Model

- Built-in transformer model (can also include saturation)
  - Star-circuit with ideal transformers
  - Connection point for nonlinear inductance and iron core loss resistance is questionable (causes case to “blow-up” occasionally)
  - Values R_1, L_1, R_2, L_2, must be calculated by user from test report data
  - Does not work with more than three windings
  - Does not work for three-phase unit (no coupling between phases)

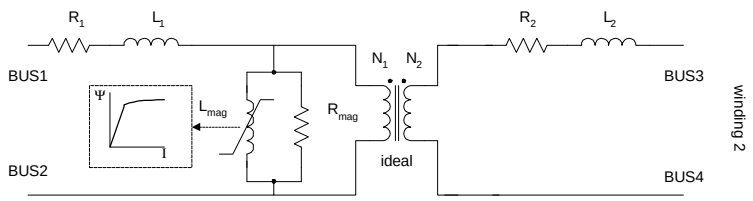

Saturable Transformer Model - Saturation

- Saturation (exciting current):
  - Can be included in built-in model or added separately using Type 98 or Type 96
  - Test report data required for I_e
  - Steady-state values determined using:

$$I_{ss} = I_{e_{(100\%V)}} * I_{FL} \qquad \Psi_{ss} = \frac{V_{pk}}{\omega}$$

```
/BRANCH
C Transformer-<--Ref<---->Iss<--Phi<-Name<-Rmag
  TRANSFORMER                          ST1A
C ...........^.....^      .....^.....^.....^.....^
            9999
C <---Nodes--><----------><-ohms<---mH<---kV
C <-Bus1<-Bus2<--Ignore--><----R<----L<-volt<---------------------------------O
01 230_A 230_B             40.47 1073. 230.0
02 13_2A                   0.044 1.179  7.62
C .....^.....^            .....^.....^.....^                                  ^
```


The built-in saturable transformer model has the capability to include the saturation characteristic of the transformer. A user can specify a point-by-point piecewise linear flux-current characteristic, which is connected to the star point of the wye equivalent circuit for the transformer. In the unsaturated region, it makes very little difference where the magnetizing inductance is connected. In the saturated region, where the slope of the flux-current characteristic becomes comparable to the short-circuit inductance (1.0 - 2.5 x L_{short} for transformers with separate windings, and 4.0 - 5.0 x L_{short} for autotransformers), it may make a difference where it is placed.

Previous tests have indicated that placing the characteristic on the winding closest to the core (usually the tertiary winding or winding with lowest voltage rating) will yield adequate results.

(n)-Winding Saturable Transformer

```
C TRANSFORMER <--Ref<---><--Iss<--Phi<-Name<-Rmag<---------------------------O

C ...........^.....^xxxxxx.....^.....^.....^.....^xxxxxxxxxxxxxxxxxxxxxxxxxxxx^
C
C -------Current<-----------Flux
C
C .............^...............^
           9999
C
C <---Nodes--><----------><-Ohms<---mH<---kV
C <-Bus1<-Bus2<---------><---Rk<---Lk<-Volt---------------------------------->O
01
C .....^.....^xxxxxxxxxxxx.....^.....^.....^xxxxxxxxxxxxxxxxxxxxxxxxxxxxxxxxx^
02
C .....^.....^xxxxxxxxxxxx.....^.....^.....^xxxxxxxxxxxxxxxxxxxxxxxxxxxxxxxxx^
03
C .....^.....^xxxxxxxxxxxx.....^.....^.....^xxxxxxxxxxxxxxxxxxxxxxxxxxxxxxxxx^
```

Rule Book: 6.4.2

Two-Winding Transformer

Data Required:

- kV rating of each winding
- Winding connections
- Transformer rating and nameplate impedance

$$Z_{base_{(winding)}} = \frac{kV_{(winding)}^{2}}{MVA_{(winding)}}$$

Assumption: 1/2 of impedance (in pu) in each winding

Three-Winding Transformer

Data Required:

- kV rating of each winding
- Winding connections
- Transformer rating and nameplate impedances (Z_H, Z_L, Z_T)

$$Z_H = \left(Z_{HL} + Z_{HT} - Z_{LT}\right)/2$$
$$Z_L = \left(Z_{HL} + Z_{LT} - Z_{HT}\right)/2$$
$$Z_T = \left(Z_{LT} + Z_{HT} - Z_{HL}\right)/2$$

System Modeling Techniques *Volume 2, Slide 36*

AutoTransformer

Data Required:

- kV rating of each winding
- Winding connections
- Transformer rating and nameplate impedance (Z_S, Z_C, Z_Y)

Coratio:

$$r = \frac{V_H - V_L}{V_H}$$

$$Z_S = \left(\frac{1}{r^2}\right) Z_H + \left(\frac{1-r}{r^2}\right) Z_L$$

$$Z_C = \left(\frac{1}{r}\right) Z_L$$

$$Z_Y = Z_T - \left(\frac{1-r}{r}\right) Z_L$$

Using the following to begin the calculation:

$$Z_H = \left(Z_{HL} + Z_{HT} - Z_{LT}\right)/2$$

$$Z_L = \left(Z_{HL} + Z_{LT} - Z_{HT}\right)/2$$

$$Z_T = \left(Z_{LT} + Z_{HT} - Z_{HL}\right)/2$$

Example Transformer Exercises

Examples:

(1) 115/34.5 kV, 10 MVA Delta/Wye-Gnd

Z_{tx} = 0.10 + j1.0 % @ 10 MVA

(2) 115/34.5/13.2 kV, 30 MVA Auto - (Delta Tertiary)

Test Report Data:

	Z_{tx}(%) (@ Tested)	Load Loss kW	Tested MVA
H-L	6.06	70.988	30
H-T	11.69	38.214	7.85
L-T	8.46	36.796	7.85

Example Transformer #1

115/34.5 kV, 10 MVA Delta/Wye-Gnd, Z_{tx} = 0.67 + j10.0 % @ 10 MVA

```
C Transformer-<--Ref<---><--Iss<--Phi<-Name<-Rmag
  TRANSFORMER                          T1A
C ...........^.....^      .....^.....^.....^.....^
             9999
C <---Nodes--><----------><-ohms<---mH<---kV
C <-Bus1<-Bus2<--Ignore--><----R<----L<-volt<---------------------------------O
01 115_A 115_B             13.29 526.0 115.0
02 34_5A                   0.399  15.8 19.92
C .....^.....^            .....^.....^.....^                                 ^
C Transformer-<--Ref<---><--Iss<--Phi<-Name<-Rmag
  TRANSFORMER    T1A                   T1B
C ...........^.....^      .....^.....^.....^.....^
C <---Nodes--><----------><-ohms<---mH<---kV
C <-Bus1<-Bus2<--Ignore--><----R<----L<-volt<---------------------------------O
01 115_B 115_C
02 34_5B
C .....^.....^            .....^.....^.....^                                 ^
C Transformer-<--Ref<---><--Iss<--Phi<-Name<-Rmag
  TRANSFORMER    T1A                   T1C
C ...........^.....^      .....^.....^.....^.....^
C <---Nodes--><----------><-ohms<---mH<---kV
C <-Bus1<-Bus2<--Ignore--><----R<----L<-volt<---------------------------------O
01 115_C 115_A
02 34_5C
C .....^.....^            .....^.....^.....^                                 ^
```


$$Z_{base_{HS}} = \left(\frac{115^2}{10/3} \right) = 3967.5\Omega$$

$$Z_{base_{LS}} = \left(\frac{\left(34.5/\sqrt{3} \right)^2}{10/3} \right) = 119.0\Omega$$

$$X_{HS} = \left(\frac{10.0\%}{2} \right) * 3967.5 = 198.4\Omega \qquad L_{HS} = \left(\frac{198.4\Omega}{2\pi 60} \right) = 526\,mH$$

$$X_{LS} = \left(\frac{10.0\%}{2} \right) * 119.0 = 5.95\Omega \qquad L_{HS} = \left(\frac{5.95\Omega}{2\pi 60} \right) = 15.8\,mH$$

Example Transformer #2

115/34.5/13.2 kV, 30 MVA Auto - (Delta Tertiary)

```
C TRANSFORMER <--Ref<---><--Iss<--Phi<-Name<-Rmag<---------------------------O
  TRANSFORMER                           TX2A
C ...........^.....^xxxxxx.....^.....^.....^.....^xxxxxxxxxxxxxxxxxxxxxxxxxxxx^
C
C -------Current<-----------Flux
C
C .............^...............^
           9999
C
C <---Nodes--><----------><-Ohms<---mH<---kV
C <-Bus1<-Bus2<----------><---Rk<---Lk<-Volt---------------------------------->O
01   HSA   LSA             0.786 96.75 46.48
C .....^.....^xxxxxxxxxxxx.....^.....^.....^xxxxxxxxxxxxxxxxxxxxxxxxxxxxxxxxxx^
02   LSA                   0.048 -4.74 19.92
C .....^.....^xxxxxxxxxxxx.....^.....^.....^xxxxxxxxxxxxxxxxxxxxxxxxxxxxxxxxxx^
03    TA    TB             0.291 16.99 13.20
C .....^.....^xxxxxxxxxxxx.....^.....^.....^xxxxxxxxxxxxxxxxxxxxxxxxxxxxxxxxxx^
```


Auto-Transformer (delta tertiary)

Test Report Data: Coratio: 0.7

	Impedance (% @ Tested MVA)	Load Loss (kW)	Tested MVA	R % @ 10	kV Rating
H-L	**6.06**	**70.988**	**30.00**	0.079	**115**
H-T	**11.69**	**38.214**	**7.85**	0.620	**34.5**
L-T	**8.46**	**36.796**	**7.85**	0.597	**13.2**

ZH=	0.1528	9.20	% @ 30.0	MVA
ZL=	0.0838	-3.14	% @ 30.0	MVA
ZT=	1.7076	35.47	% @ 30.0	MVA
Zs=	0.3632	16.8559	% @ 30.00	MVA
Zc=	0.1197	-4.4885	% @ 30.00	MVA
Zy=	1.6716	36.8197	% @ 30.00	MVA
Zs=	0.7845	96.5785 mH		46.48 kV
Zc=	0.0475	-4.7237 mH		19.92 kV
Zy=	0.2913	17.0172 mH		13.20 kV

Transformer Parameter Calculation

AUX Routine "TRELEG"

```
XFORMER                                33.
C W D<-------Freq<------SBVA  S
  3 1        60.0       750.0 0
C ^.^...........^...........^.^
C I J<-------Rpos<------Xpos<------Rzero--------Xzero
  1 2      0.0017        0.13      0.0057      0.1150
  1 3      0.0042        0.35      0.0096      0.2680
  2 3      0.0044        0.20      0.0143      0.1360
C ^.^...........^...........^...........^...........^
BLANK CARD ENDING MEASUREMENT DATA
  1
C J I<-----Vrating<--------Rdc<--Na1<--Nb1<--Nc1<--Na2<--Nb2<--Nc2
  1 0       288.67      0.4730 HIGHA       HIGHB       HIGHC
  2 0       138.56      0.0298  LOWA        LOWB        LOWC
  3 1        28.00      0.0113 TERTA TERTB TERTB TERTC TERTC TERTA
C ^x^x...........^...........^.....^.....^.....^.....^.....^.....^
BLANK CARD ENDING WINDING DATA
  1
C <------Xpoz<------Xzero
       100.00        1.00
        99.87        1.13
        99.67        1.33
C ..........^...........^
BLANK CARD END MAGNETIZING IMPEDANCES
```

AUX Rule Book: 6.1.1

Transformer Parameter Calculation - cont

AUX Routine "BCTRAN"

```
BEGIN NEW DATA CASE
XFORMER                                44.
C <-----Freq<-----Ipos<-----Spos<-----Lpos<----Izero<----Szero<----Lzero V V V V
 3      60.0     0.428     300.0    135.73     0.428     300.0    135.73   1 3 1
C .........^.........^.........^.........^.........^.........^.........^.^.^.^.^
C
C
C
C k<-------Vk<-------Rk <-Bus1<-Bus2<-Bus3<-Bus4<-Bus5<-Bus6
  1    132.79    0.2055    H-1         H-2         H-3
  2     63.39    0.0742    L-1         L-2         L-3•
  3     50.00    0.0822    T-1   T-2   T-2               T-1
C ^.........^.........^x.....^.....^.....^.....^.....^.....^
C
C                                                      I I
C                                                      D L
C  k<------Pik<-----Zik+<-----Spos<-----Zik0<----Szero V V
 1 2       0.0      8.74     300.0    7.3432     300.0 3 1
 1 3       0.0      8.68      76.0  26.25818     300.0
 2 3       0.0      5.31      76.0  18.55282     300.0
C .^.........^.........^.........^.........^.........^.^.^
BLANK CARD TO TERMINATE THE SHORT-CIRCUIT TEST DATA
BLANK END OF XFORMER CASES
```

AUX Rule Book: 6.2.2

Distributed Parameter Transmission Line

Distributed Parameter Branch:

```
C <---Nodes--><---Refer--><---------------><----> I I I
C <-Bus1<-Bus2<-Bus3<-Bus4<---R'<---L'<---C'<--Len L P P <---------------------O
-1 BUS1A BUS2A               1.0  6.50 0.010 100.0 0
C .....^.....^.....^.....^.....^.....^.....^.....^.^.^.^<--Zero Sequence<----->^
-2 BUS1B BUS2B               0.3  2.00 0.015 100.0 0
C .....^.....^.....^.....^.....^.....^.....^.....^.^.^.^<--Pos Sequence<------>^
-3 BUS1C BUS2C
C .....^.....^.....^.....^.....^.....^.....^.....^.^.^.^xxxxxxxxxxxxxxxxxxxxxxx^
```

Example:

100 Mile, 69kV Line (Impedance Data from Application Guide)

$$Z_S = \sqrt{\frac{L'}{C'}} = 365\Omega$$

Rule Book: 7.3.1

Transmission Lines - Typical Parameters

kV	R_1(Ω/mi)	L_1(mH/mi)	C_1(uF/mi)	Z_s(Ω)
500	0.04	1.8	0.022	300
345	0.08	1.8	0.020	300
230	0.16	2.4	0.015	400
138	0.30	2.5	0.015	420
115	0.36	2.4	0.016	420
69	0.68	2.2	0.016	450

System Modeling Techniques *Volume 2, Slide 44*

$$Z_{surge} = \sqrt{\frac{L_1'}{C_1'}}$$

$$C_1 = \frac{MVAr_{(Line\ Charging)}}{\omega kV^2}$$

Transmission Line Parameter Calculation

AUX Routine "LINE CONSTANTS"

- LINE-PARAMETERS Module
  - Output: Series impedance and shunt admittance
- LINE-MODEL Module
  - Output: EMTP Line Models

Line Parameter Calculation - cont

- Models for Transient Analysis:

FD-LINE:	Frequency Dependent Line Model
CP-LINE:	Constant Parameter Line Model
CORONA:	Nonlinear Corona Model

- Models for Steady-State Analysis:

PI-EXACT:	Exact Single-Frequency PI Equivalent

System Modeling Techniques *Volume 2, Slide 46*

Line Parameter Calculation - cont

General Structure of the Data:

- BEGIN NEW DATA CASE
  - LINE CONSTANTS
  - MODULE {LINE-PARAMETERS, LINE-MODEL, FIT_S}
  - Conductor Data (BLANK)
  - Frequency Data (BLANK)
  - Control Cards
- BLANK END OF DATA CASE

Transmission Lines - Data Preparation

Transmission Line:

Voltage: 115 kV
Length: 100 miles
Tower: Double circuit steel

Phase Conductors:
1750 AA/61 (Jessamine)
O.D. = 1.525"
Rdc = 0.0523 Ω/mi

Ground Conductors:
3 #6 Alumoweld
O.D. = 0.349"
Rdc = 3.4468 Ω/mi

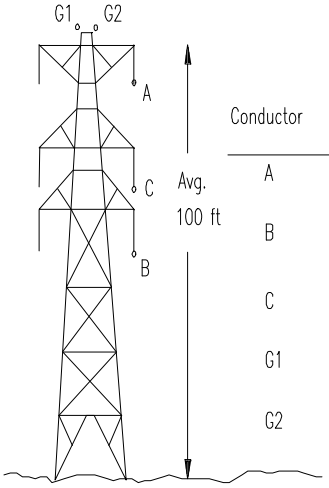

Conductor	Location Hor	Location Ver
A	14.3	84.2
B	14.3	52.2
C	18.6	67.2
G1	−8.0	100
G2	8.0	100

Earth resistivity = 55.28 Ω-meters

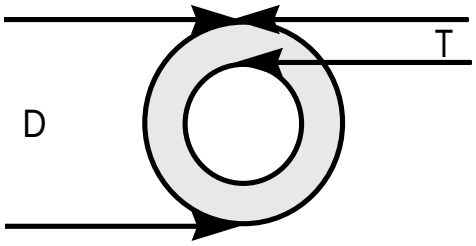

Skin effect ratio = T/D
(0.5 for solid conductors)

LINE-PARAMETERS Module

Example LINE-PARAMETERS Model:

AUX Rule Book: 8.7

```
LINE CONSTANTS
LINE-PARAMETERS
ENGLISH
C                 X        R
C P    S       R T        E      D       H       V       V       S     A       N
C H    K       E Y        A  CM  I   M   O    M  T    M  M   CM  E DEG L       B
C A    I       S P        C  IN  A  FT   R   FT  O   FT  I   IN  P     P       U
C S<---N<------I-E<-------T------M<------I<------W<------D<------A<----H<----> N
  0  0.5  3.4468 4           0.349   -8.00   100.0   100.0
C ^....^.......^.^........^......^.......^.......^.......^.......^.....^xxxxxx.^
  0  0.5  3.4468 4           0.349    8.00   100.0   100.0
C ^....^.......^.^........^......^.......^.......^.......^.......^.....^xxxxxx.^
  1  0.5  0.0523 4           1.525    14.3    84.2    84.2
C ^....^.......^.^........^......^.......^.......^.......^.......^.....^xxxxxx.^
  2  0.5  0.0523 4           1.525    18.6    67.2    67.2
C ^....^.......^.^........^......^.......^.......^.......^.......^.....^xxxxxx.^
  3  0.5  0.0523 4           1.525    14.3    52.2    52.2
C ^....^.......^.^........^......^.......^.......^.......^.......^.....^xxxxxx.^
BLANK END OF CONDUCTOR DATA
C
C ---RHO<-----FREQ<--------->CCCCCC ZZZZZZ C<----LEN <-PISM<-------> M F
   55.28      60.0           111111 111111 1   100.0     00          0 1
C .....^.........^xxxxxxxxxxx^^^^^^x^^^^^^x^.......^x^^^^^^xxxxxxxxx.^.^
.NODES              SEN_A     REC_A     SEN_B     REC_B     SEN_C     REC_C
C xxxxxxxxxxxxxxxxx.....^xxxx.....^xxxx.....^xxxx.....^xxxx.....^xxxx.....^
BLANK CARD ENDIND FREQUENCY DATA
```

LINE-PARAMETERS Module - Output

Line-Parameters Output - Sequence Quantities:

```
#####  SYMMETRICAL COMPONENTS WAVE QUANTITIES  #####
SEQUENCE      SURGE IMPEDANCE       VELOCITY     RESISTANCE    REACTANCE    SUSCEPTANCE
        MAGNITUDE(OHM) ANGLE(DEGR.) MILES/SEC     OHM/MILE     OHM/MILE       S/MILE
  ZERO    8.15370E+02 -7.45356E+00  1.39874E+05  5.70155E-01   2.14173E+00  3.33368E-06
POSITIVE  3.51146E+02 -2.31029E+00  1.80974E+05  5.89738E-02   7.29695E-01  5.93719E-06
```

Line-Parameters Output -
Punch File for PI-Circuit Branch:

```
$VINTAGE,1
 1 SEN_A REC_A            2.511160334E+01 3.139330619E+02 1.341059915E+00
 2 SEN_B REC_B            1.788064344E+01 1.283323758E+02-2.665826561E-01
                          2.240925305E+01 3.194899186E+02 1.358545289E+00
 3 SEN_C REC_C            1.718402696E+01 1.103167667E+02-1.306383834E-01
                          1.605347539E+01 1.359044479E+02-2.933815528E-01
                          2.128943852E+01 3.218038308E+02 1.334457544E+00
$VINTAGE,0
```


IMPEDANCE MATRIX (OHM/MILE)

FOR THE SYMMETRICAL COMPONENTS OF THE EQUIVALENT PHASE CONDUCTORS ROWS PROCEED IN SEQUENCE 0,1,2, 0,1,2 ETC. AND COLUMNS PROCEED IN SEQUENCE 0,2,1, 0,2,1 ETC.

```
0   5.70155E-01
    2.14173E+00

1  -1.28411E-03  -4.07151E-02
   -2.40281E-02   3.40222E-02

2   3.28916E-02   5.89738E-02   4.27454E-02
   -3.45153E-02   7.29695E-01   3.24437E-02
```

LINE-MODEL Module

Example FD-LINE Model:

AUX Rule Book: 8.8

```
LINE CONSTANTS
LINE-MODEL         FD-LINE   QREAL     LOG       0.1       10        8
ENGLISH                                2
C                X        R
C P    S       R T        E      D       H       V       V       S     A       N
C H    K       E Y        A  CM  I   M   O    M  T    M  M   CM  E DEG L       B
C A    I       S P        C  IN  A  FT   R   FT  O   FT  I   IN  P     P       U
C S<---N<------I-E<-------T------M<------I<------W<------D<------A<----H<----> N
  0  0.5  3.4468 4           0.349   -8.00   100.0   100.0
  0  0.5  3.4468 4           0.349    8.00   100.0   100.0
C ^....^.......^.^........^......^.......^.......^.......^.......^.....^xxxxxx.^
  1  0.5  0.0523 4           1.525    14.3    84.2    84.2
  2  0.5  0.0523 4           1.525    18.6    67.2    67.2
  3  0.5  0.0523 4           1.525    14.3    52.2    52.2
C ^....^.......^.^........^......^.......^.......^.......^.......^.....^xxxxxx.^
BLANK END OF CONDUCTOR DATA
C    RHO   FMARTIX                            LENGTH  ISEG
   55.28     5000.                             100.0     0
C .....^.........^xxxxxxxxxxxxxxxxxxxxxxxx........^.....^
C  OPTIONAL CONTROL CARDS
.NODES              SRC_A     TXH_A     SRC_B     TXH_B     SRC_C     TXH_C
C xxxxxxxxxxxxxxxx.....^xxxx.....^xxxx.....^xxxx.....^xxxx.....^xxxx.....^
BLANK END OF FREQUENCY DATA
```

LINE-MODEL Module - cont

Example CP-LINE Model:

AUX Rule Book: 8.8

```
LINE CONSTANTS
LINE-MODEL         CP-LINE
ENGLISH
C                I
C                X        R
C P    S       R T        E      D       H       V       V       S     A       N
C H    K       E Y        A  CM  I   M   O    M  T    M  M   CM  E DEG L       B
C A    I       S P        C  IN  A  FT   R   FT  O   FT  I   IN  P     P       U
C S<---N<------I-E<-------T------M<------I<------W<------D<------A<----H<----> N
  0  0.5  3.4468 4           0.349   -8.00   100.0   100.0
  0  0.5  3.4468 4           0.349    8.00   100.0   100.0
C ^....^.......^.^........^......^.......^.......^.......^.......^.....^xxxxxx.^
  1  0.5  0.0523 4           1.525    14.3    84.2    84.2
  2  0.5  0.0523 4           1.525    18.6    67.2    67.2
  3  0.5  0.0523 4           1.525    14.3    52.2    52.2
C ^....^.......^.^........^......^.......^.......^.......^.......^.....^xxxxxx.^
BLANK END OF CONDUCTOR DATA
C    RHO   FMARTIX                           LENGTH  ISEG
   55.28      60.0                            100.0     0
C .....^.........^xxxxxxxxxxxxxxxxxxxxxxxx........^.....^
.NODES              SEN_A     REC_A     SEN_B     REC_B     SEN_C     REC_C
C xxxxxxxxxxxxxxxx.....^xxxx.....^xxxx.....^xxxx.....^xxxx.....^xxxx.....^
BLANK CARD ENDIND FREQUENCY DATA
```

LINE-MODEL Module - cont

Example PI-EXACT Model:

AUX Rule Book: 8.8

```
LINE CONSTANTS
LINE-MODEL         PI-EXACT
ENGLISH
C                I
C                X        R
C P    S       R T        E      D       H       V       V       S     A       N
C H    K       E Y        A  CM  I   M   O    M  T    M  M   CM  E DEG L       B
C A    I       S P        C  IN  A  FT   R   FT  O   FT  I   IN  P     P       U
C S<---N<------I-E<-------T------M<------I<------W<------D<------A<----H<----> N
  0  0.5  3.4468 4           0.349   -8.00   100.0   100.0
  0  0.5  3.4468 4           0.349    8.00   100.0   100.0
C ^....^.......^.^........^......^.......^.......^.......^.......^.....^xxxxxx.^
  1  0.5  0.0523 4           1.525    14.3    84.2    84.2
  2  0.5  0.0523 4           1.525    18.6    67.2    67.2
  3  0.5  0.0523 4           1.525    14.3    52.2    52.2
C ^....^.......^.^........^......^.......^.......^.......^.......^.....^xxxxxx.^
BLANK END OF CONDUCTOR DATA
C    RHO   FMARTIX                            LENGTH  ISEG
   55.28      60.0                             100.0     0
C .....^.........^xxxxxxxxxxxxxxxxxxxxxxxx........^.....^
.NODES              SEN_A     REC_A     SEN_B     REC_B     SEN_C     REC_C
C xxxxxxxxxxxxxxxx.....^xxxx.....^xxxx.....^xxxx.....^xxxx.....^xxxx.....^
BLANK CARD ENDIND FREQUENCY DATA
```

Modeling Nonlinear Elements

- EMTP Supports Two Classes of Nonlinear Elements:

Pseudononlinear Model

- Relies on data calculated during previous time step
  - Type 97 Staircase time varying resistance (8.2)
  - Type 99 Pseudononlinear resistance (8.3)
  - Type 98 Pseudononlinear reactor (8.4)
  - Type 96 Pseudononlinear hysteretic reactor (8.5)

System Modeling Techniques *Volume 2, Slide 54*

Modeling Nonlinear Elements - cont

- EMTP Supports Two Classes of Nonlinear Elements:

True Nonlinear Model

- Solves iteratively for precise instantaneous solution

  - Type 91 Multiphase time-varying linear resistance
  - Type 92 Multiphase piecewise linear resistance (flashover)
    Multiphase ZnO surge arrester
    Multiphase active gap surge arrester
    Dynamic circuit breaker model
  - Type 93 Single-phase nonlinear inductance

Arrester Characteristic

Transformer Insulation Withstands		Arrester Protective Characteristics
Switching Surge	⇔	Switching Surge (45x90μSec wave)
BIL	⇔	Impulse Discharge Voltage (8x20μSec wave)
Chopped Wave	⇔	Equivalent Front of Wave (0.6x1.5μSec wave)

System Modeling Techniques *Volume 2, Slide 56*

EMTP Arrester Representations

Piecewise
Linear - Type 92 (4444)
Pseudononlinear - Type 99

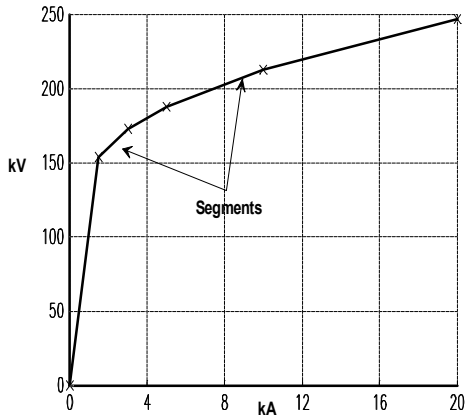

ZnO
Type 92 (5555)
Single or Multi Exponential

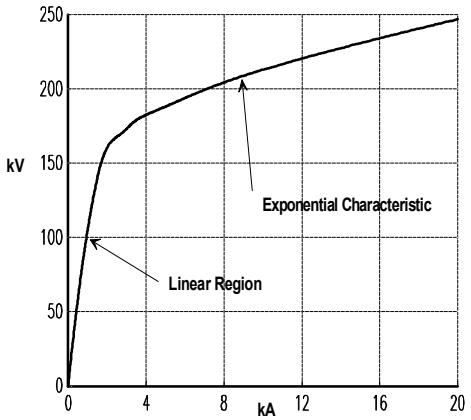

System Modeling Techniques *Volume 2, Slide 57*

Piecewise Models

Data Required:

- Flashover Voltage
- V-I Characteristic
- Minimum Series Resistance (0.0)

Example Data Setup - 1

```
C                                -> -1: GAP FLASHES, STAYS CLOSED
C 96kV Gapped SiC Arrester      |    0: GAP FLASHES ON AND OFF
C                               |   +1: GAP FLASHES, CLEARS ONCE
C             <--REFER -->      V
C <-BUS1<-BUS2<-BUS3<-BUS4<FLASH
92  AR1A                                4444.                                4
C .....^.....^.....^.....^.....^.......4444.....................................o
C
C ------------------RLIN<-------------------VFLASH<-------------------VZERO
                    0.0                  218000.0
C .....................^........................^........................^
C
C ---------------CURRENT<------------------VOLTAGE
                 1500.0                  154000.0
                 3000.0                  173000.0
                 5000.0                  188000.0
                10000.0                  213000.0
                20000.0                  247000.0
                40000.0                  296000.0
C .....................^........................^
                  9999.
C <-BUS1<-BUS2<-BUS3<-BUS4<FLASH
92  AR1B        AR1A                    4444.                                4
92  AR1C        AR1A                    4444.                                4
C .....^.....^.....^.....^.............4444.....................................o
```

Current vs Voltage Data (crest voltage) 1mSec Wavefront

Rule Book: 8.8.2

ZnO Model Usage

$$i = p\left(\frac{V}{V_{ref}}\right)^q$$

Data Required:

- Maximum Switching Surge Protective Level (MSSPL) [Vref]
- Current at MSSPL [p]
- q (≈ 25-30)

System Modeling Techniques *Volume 2, Slide 60*

Example arrester energy capability data:

Arrester Rating (kV)	Max Energy Capability (kJ)
2.7 - 48	4
54 - 360	7.2
396 - 588	13.1

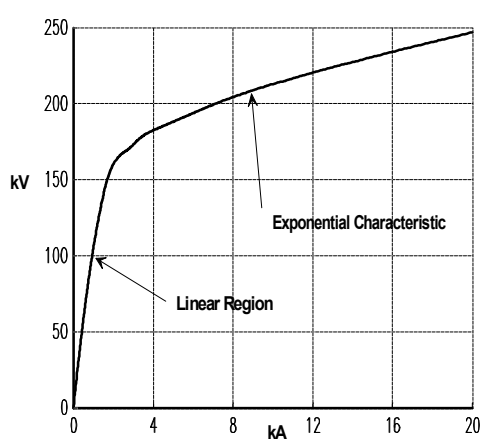

Example Data Setup - 2

```
C 90 kV MOV
C Single-Exponential No-Gap Zinc Oxide Surge Arrester
C
C             <--REFER -->
C <-BUS1<-BUS2<-BUS3<-BUS4
92  MOVA                          5555.                                   4
C .....^.....^.....^.....^............5555.....................................o
C
C ------------------VREF<-------------------VFLASH<-------------------VZERO
               177000.0                    -100.0
C ....................^........................^........................^
C ------------------COEF<--------------------EXPON<--------------------VMIN
                 3000.0                       30.0                      0.5
C ....................^........................^........................^
                   9999
C
C <-BUS1<-BUS2<-BUS3<-BUS4
92  MOVB        MOVA                  5555.                                   4
92  MOVC        MOVA                  5555.                                   4
C .....^.....^.....^.....^............5555.....................................o
```

Rule Book: 8.9.2

Example 90kV MOV data:

Arrester rating:	90 kV
MCOV:	72.9 kV
FOW Protective Level:	237 kV
Max Discharge Voltage:	204 kV (10 kA, 8 x 20 wave)
MSSPL:	177 kV @ 3000 Amps

Note: for maximum energy duty, a voltage multiplier of 0.962 should be used for this arrester

AUX Routine ARRDAT - ZnO

Data Specification:

NEXP:	Used for selecting number of segments
IPHASE:	Number of phases
ERRLIM:	Maximum relative error
IPRZNO:	Controls diagnostic printout
VREF:	Reference voltage used for scaling
VFLASH:	Gap flashover voltage (volts)

System Modeling Techniques *Volume 2, Slide 62*

Recommended Values (or typical):

NEXP:	-1 (automatic selection)
IPHASE:	1 (single-phase) or 3 (three-phase)
ERRLIM:	0.05 (default value 1/20)
IPRZNO:	1 (suggested values between 0-3)
VREF:	MSSPL
VFLASH:	0.0 (gapless)

ARRDAT - cont

Data Specification - cont:

A1:	Voltage rating of arrester (RMS volts)
A2:	Desired voltage rating, scaling (RMS volts)
A3:	Voltage scaling multiplier
A4:	Current multiplier (# columns)
A5:	Gap specification (0 - gapless)
AMIN:	Minimum current (0.001)

Example Case - ARRDAT Setup

```
BEGIN NEW DATA CASE
C
C   180kV MOV
C
SATURATION
     77.
C
C <-----NEXP<-----IPHASE<-----ERRLIM<-----IPRZNO<-------VREF<-----VFLASH
          -1           3         .05           1    349000.0         0.0
C .........^...........^...........^...........^...........^...........^
C
C <---RATING<----OP_VOLT<-------MULT<-----I_MULT<-------FLAG<------I_MIN
    180000.0    180000.0         1.0         1.0         0.0       0.001
C .........^...........^...........^...........^...........^...........^
C
C <--CURRENT<---VOLTAGE
         1.0  288648.00
        10.0  300886.00
       100.0  316500.00
       500.0  333380.00
      1000.0  343086.00
      2000.0  362498.00
C .........^..........^
```

Current vs Voltage Data (crest voltage) 1mSec Wavefront

AUX Rule Book: 7.3.2

ARRDAT Setup - Results

```
C
C 90 KV MOV - TYPE 92
C Multi-Exponential No-Gap Zinc Oxide Surge Arrester
C
C <-BUS1<-BUS2<-BUS3<-BUS4
92  AR1A                              5555.                                   4
C .....^.....^.....^.....^............5555.....................................O
C
C ------------------VREF<-------------------VFLASH<-------------------VZERO
  1.6900000000000000E+05   -1.0000000000000000E+02
C ......................^.........................^........................^
C ------------------COEF<--------------------EXPON<--------------------VMIN
  6.3266119438704450E+03    5.5452573559178560E+01   7.5396566346528330E-01
  1.9910288671563670E+03    4.5513022365169120E+01   8.9019526627218860E-01
  7.6579186503951430E+02    3.0974711296765370E+01   9.3639053254437710E-01
  6.9716630725708730E+02    2.4153014752609720E+01   9.8633136094674460E-01
  8.2853616588556050E+02    1.2594017637608060E+01   1.0150473372781060E+00
C ......................^.........................^........................^
                     9999
C <-BUS1<-BUS2<-BUS3<-BUS4
92  AR1B        AR1A                  5555.                                   4
92  AR1C        AR1A                  5555.                                   4
C .....^.....^.....^.....^............5555.....................................O
```

Energy

Low Voltage MOVs

- Application at low voltage buses (480 Volt) for protection from high energy transient events, such as voltage magnification.
  - Low frequency (300-1000 Hz)
  - High Energy (mag > 2.0 pu)

Typical V-I Curve - Low Voltage MOV

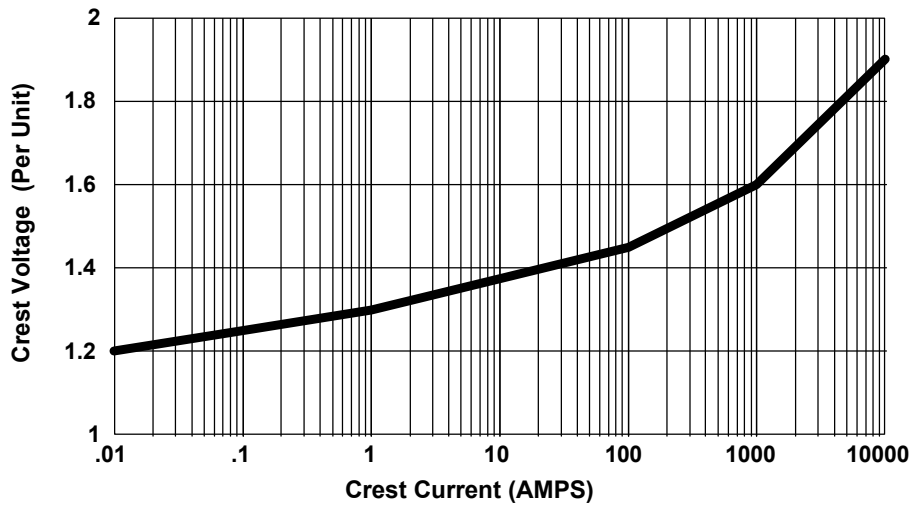

System Modeling Techniques *Volume 2, Slide 67*

Typical energy capability:

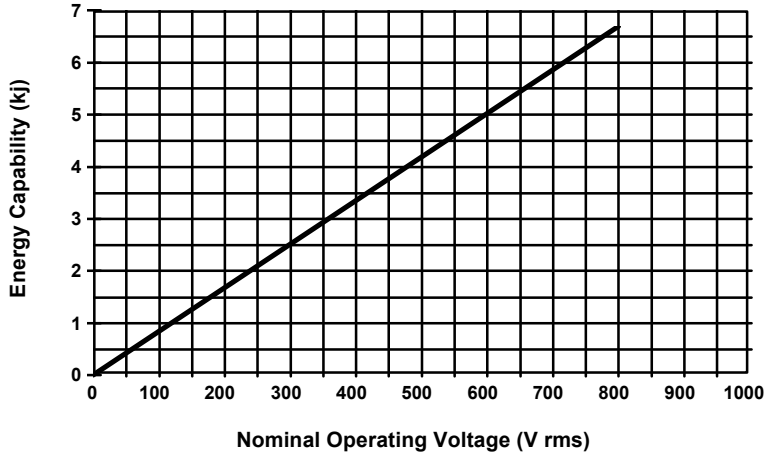

Example - Low Voltage MOV Model

```
C <-------- 480V MOV Arrester
C           MCOV = 305V, Energy Capability = 2-6kJ
C           MSSPL = 700V @ 500 amps
C
C
C Single-Exponential No-Gap Zinc Oxide Surge Arrester
C
C [single-exponential no gap]
C <-BUS1<-BUS2<-BUS3<-BUS4<-----------5555.<-----------------------------------0
92 LMOVA                               5555.                                   4
C .....^.....^.....^.....^...........^^^^.....................................^
C
C ------------------VREF<-------------------VFLASH<-------------------VZERO
                   700.0                     -100.
C ....................^........................^........................^
C ------------------COEF<--------------------EXPON<--------------------VMIN
                   500.0                      30.0                      0.5
C ....................^........................^........................^
                    9999
C
C <-BUS1<-BUS2<-BUS3<-BUS4<-----------5555.<-----------------------------------0
92 LMOVB       LMOVA                   5555.                                   4
92 LMOVC       LMOVA                   5555.                                   4
C .....^.....^.....^.....^...........^^^^.....................................^
```


$$i = 500\left(\frac{V}{700}\right)^{30}$$

Transformer Saturation - Example Data

AUX Rule Book: 7.1.1

```
BEGIN NEW DATA CASE
SATURATION
C --FREQ<-KVBASE<MVABASE
    60.0   7.620    4.00
C .....^.......^.......^
C
C ----------IRMS<-----------VRMS
            0.01            1.00
            0.05            1.16
            0.10            1.22
            0.15            1.26
            0.20            1.28
            0.30            1.32
            0.40            1.36
            0.50            1.39
            0.60            1.43
            0.70            1.47
            0.80            1.50
            0.90            1.53
            1.00            1.56
C .............^...............^
            9999
BLANK END OF SATURATION CASES
BEGIN NEW DATA CASE
BLANK END OF ALL CASES
```

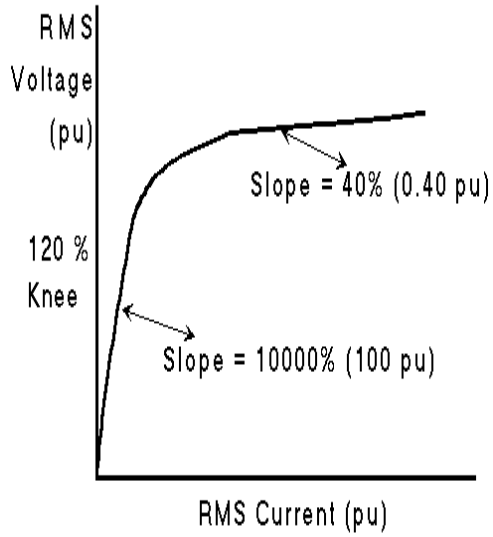

Typical saturation characteristic:

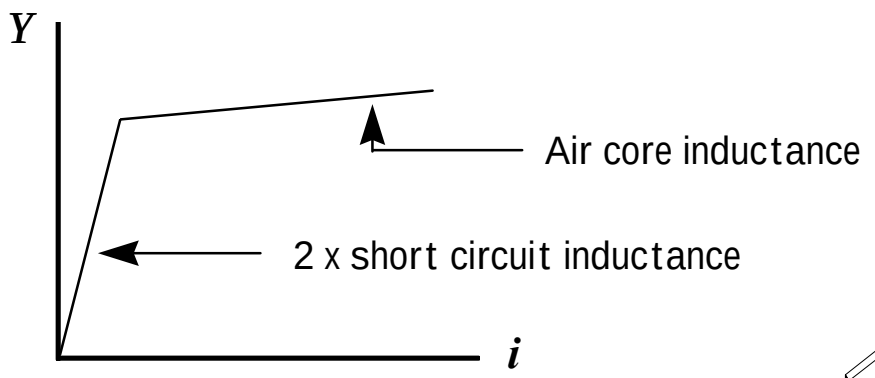

Note: place nonlinear inductance on winding closest to the core (tertiary - 3 winding)

Transformer Saturation - Type 98 Setup

```
C  <-Nodes--><---Refer--->
C <-Bus1<-Bus2<-Bus3<-Bus4<-Iss<-Phiss<-----------------------------------OUTPUT
98TERTI1TERTI2             0.120  17.1                                        1
C .....^.....^.....^.....^.....^.....^.........................................^
C
C <------Current<-----------Flux
   .12032088E+00   .17151026E+02
   .16033852E+00   .22868034E+02
   .22579091E+00   .28585043E+02
   .20760636E+01   .34302052E+02
   .10583757E+03   .40019060E+02
   .48662330E+03   .45736069E+02
   .85683243E+03   .51453077E+02
   .13043260E+04   .57170086E+02
            9999
C .............^...............^
C
```

Rule Book: 8.4.2

```
BEGIN NEW DATA CASE
SATURATION
C
C <-Freq<-kVBase<MVABase<-Ipunch<-Kthird
    60.0    7.62  0.8333
C .....^.......^.......^.......^.......^
C
C <---------Irms<-----------Vrms
        0.000778           0.600
        0.001037           0.800
        0.001383           1.000
        0.008729           1.200
        0.415470           1.400
        1.963600           1.600
        3.883900           1.800
        6.176500           2.000
C .............^...............^
            9999
C .............^
BLANK END OF SATURATION CASES
BEGIN NEW DATA CASE
BLANK END OF ALL CASES
```

AUX Rule Book: 7.1.1

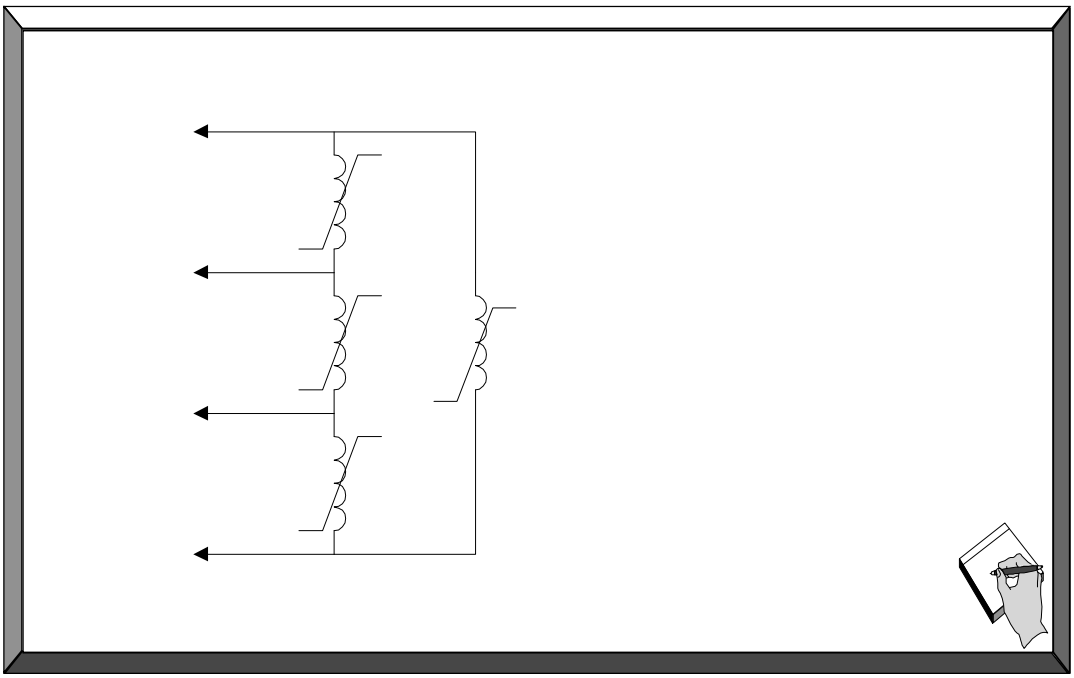

Transformer Saturation - Type 96 Setup

```
C <---Nodes--><----------><IST--<PHI--<PHIRS
96TXHA  METERA             8888.
C .....^.....^.....^.....^.....^.....^.....^
C    CURRENT--->    FLUX------->
  -.92575277E+01  -.39134179E+02
  -.61716850E+01  -.38898430E+02
  -.27772583E+01  -.38073311E+02
  -.12343370E+01  -.37248194E+02
  -.46287636E+00  -.36540949E+02
   .15429212E+00  -.35126460E+02
   .54002243E+00  -.33476224E+02
   .89489429E+00  -.30647248E+02
   .10800449E+01  -.25932286E+02
   .12343370E+01  -.18859845E+02
   .15429213E+01   .12612521E+02
   .16972133E+01   .17445357E+02
   .21600897E+01   .23574806E+02
   .27772583E+01   .28289767E+02
   .33635682E+01   .30647248E+02
   .43973254E+01   .33004728E+02
   .60173926E+01   .35126460E+02
   .82546290E+01   .36776698E+02
   .10800448E+02   .37955438E+02
   .15429212E+02   .39134179E+02
   .24686740E+02   .40077170E+02
   .33944268E+02   .40312919E+02
            9999
C .............^...............^
```

Transformer Data:

500 kVA, Ztx = 10%
Core Loss = 5 kW
Ie = 2%

Saturation Characteristic (pu)

Current	Voltage
0.02	1.00
0.20	1.28
1.00	1.56

Rule Book: 8.5.2

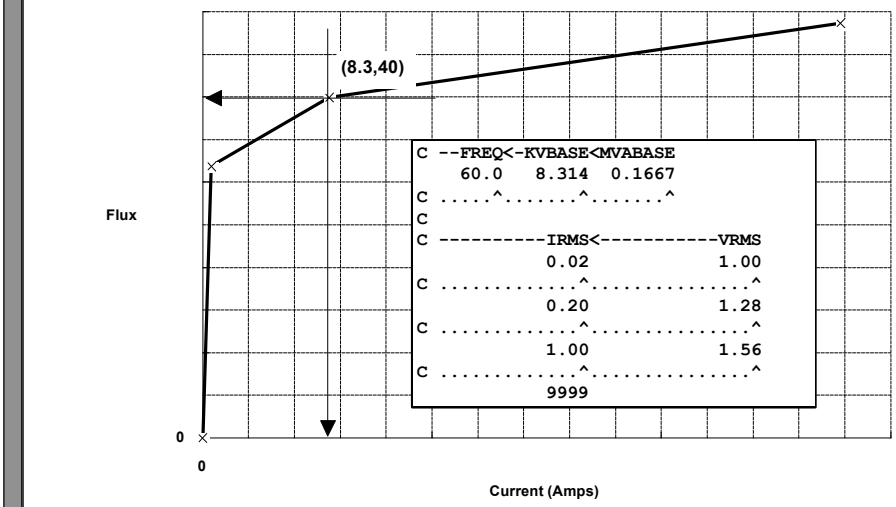

Modeling Switches

- Ordinary Switches
  - Class 1 - conventional (deterministic) time controlled switch
  - Class 2 - voltage controlled (flashover) switch
  - Class 3 - STATISTICS (random closing/opening) switch
  - Class 4 - SYSTEMATIC (regularly varied closing time) switch
- TACS - Controlled Switches
  - Type 11 (simple opening/closing - GRID signal)
  - Type 12 (simulate spark gap of a triac - SPARK signal)
  - Type 13 (simple opening/closing - any TACS signal)

System Modeling Techniques *Volume 2, Slide 72*

Conventional Switches - Class 1

```
C <-Bus1<-Bus2<---Tclose<----Topen<-------Ie<----Flash<--Request<-----Target<--O
    SRCA  CAPA  16.67E-3      9999                                              1
C .....^.....^.........^.........^.........^.........^.........^...........^xxx^
```

Remarks:

Breaker closes @ 16.67mSec
(does not open - 9999)

Current through breaker is
requested (1 - col 80)

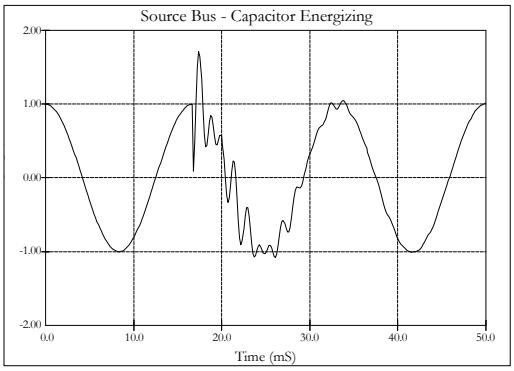

Rule Book: 9.3

Conventional Switches - Preinsertion

```
C BUS-->BUS--><---TCLOSE<----TOPEN<-------IE<----FLASH<--REQUEST<-----TARGET<--O
   BUS1A PRE1A  25.00E-3      9999                                            1
   BUS1B PRE1B  25.00E-3      9999
   BUS1C PRE1C  25.00E-3      9999
C .....^.....^.........^.........^.........^.........^.........^...........^...^
   PRE1A BUS2A  33.00E-3      9999                                            1
   PRE1B BUS2B  33.00E-3      9999
   PRE1C BUS2C  33.00E-3      9999
C .....^.....^.........^.........^.........^.........^.........^...........^...^
```

Remarks:

Breaker preinsertion contact closes @ 25.00mSec & shorting contact @ 33.00mSec

Current through breaker is requested (1 - col 80)

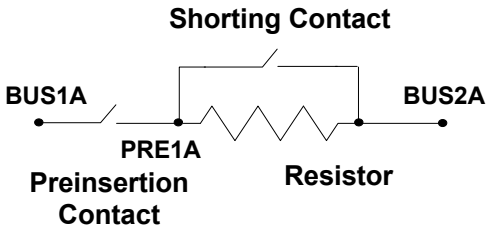

Conventional Switches - Current Chopping

```
C <-Bus1<-Bus2<---Tclose<----Topen<-------Ie<----Flash<--Request<-----Target<--O
    SRCA  CAPA  -16.67E-3 50.0E-03       3.0                                   1
C .....^.....^.........^.........^.........^.........^.........^...........^xxx^
```

Remarks:

Breaker to open @ 50.0mSec

Current (3 amps) is chopped

Current through breaker is requested (1 - col 80)

Conventional Switches - Breaker Restrike

```
C BUS-->BUS--><---TCLOSE<----TOPEN<-------IE<----FLASH<--REQUEST<-----TARGET<--O
   BUS_A CAP1A  -1.00E-3 999.9E-03
   BUS_B CAP1B  -1.00E-3  25.0E-03                                              1
   BUS_C CAP1C  -1.00E-3  25.0E-03
C .....^.....^.........^.........^.........^.........^.........^...........^...^
   CAP1B BUS_B  38.90E-3 999.9E-03                                              1
C .....^.....^.........^.........^.........^.........^.........^...........^...^
```

Remarks:

Breaker (phase B) opens @ 25.00mSec & restrikes @ 38.90mSec

Current through breaker is requested (1 - col 80)

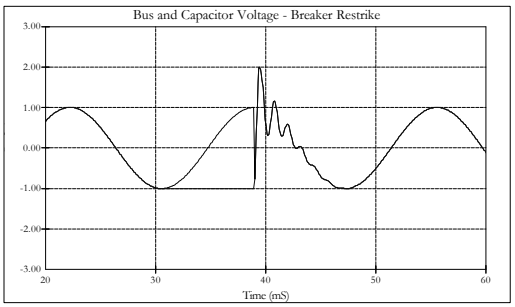

Conventional Switches - Class 2 - Gap

```
C <-Bus1<-Bus2<---Tclose<---Tdelay<-------Ie<---VFlash<--Request<-----Target<--O
   BUS1A             0.0   5.0E-03            375588.4                        1
C .....^.....^.........^.........^.........^.........^.........^...........^xxx^
```

Remarks:

Gap will flash when voltage across it exceeds Vflash (time before flash is allowed is 0sec and delay time before gap will open is 5mSec)

$$V_{flash} = 230\,kV * \frac{\sqrt{2}}{\sqrt{3}} * 2 = 375.588\,kV$$

Current through gap is requested (1 - col 80)

Conventional Switches - Class 3 - Statistics

```
C ----dt<---Tmax<---Xopt<---Copt<-Epsiln<-Tolmat<-Tstart
   50E-6  100E-3
C .....^.......^.......^.......^.......^.......^.......^
C -Iprnt<--Iplot<-Idoubl<-Kssout<-Maxout<---Ipun<-Memsav<---Icat<-Nenerg<-Iprsup
    5001      -1       0       0       0       0       0       0       3
C .....^.......^.......^.......^.......^.......^.......^.......^.......^.......^
C <--Isw<--Itest<--Idist<--Aincr<-Xmaxmx<-Degmin<-Degmax<-Statfr<-Sigmax<--Nseed
       1       0       0            -2.0     0.0   180.0    60.0               0
C .....^.......^.......^.......^.......^.......^.......^.......^.......^.......^
```

```
C <-Bus1<-Bus2<----Tmean<---StdDev<-------Ie<----Flash<--Request<-----Target<--O
    SRCA  CAPA  16.67E-3    0.0014                    STATISTICS
C .....^.....^.........^.........^.........^.........^.........^...........^xxx^
```

Remarks:

Number of shots = 3, Mean closing time = 16.67mSec, StdDev = 0.0014Sec

Statistics Switch - cont

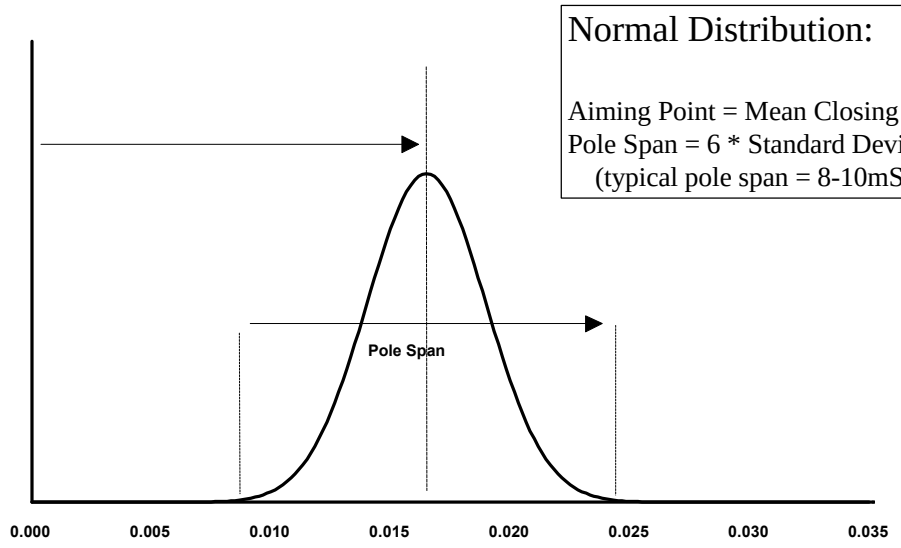

System Modeling Techniques *Volume 2, Slide 79*

Conventional Switches - Class 5 - Measuring

```
C BUS-->BUS--><---TCLOSE<----TOPEN<-------IE<----FLASH<--REQUEST<-----TARGET<--O
   TERMA DRV1A                                     MEASURING                1
   TERMB DRV1B                                     MEASURING                1
   TERMC DRV1C                                     MEASURING                1
C .....^.....^.........^.........^.........^.........^.........^...........^...^
```

Remarks:

Current through switch is monitored

TACS Controlled Switch - Type 11

```
C BUS-->BUS-->&lt;------Vig&lt;----Ihold&lt;-------td&lt;---------CLOSEDSame&lt;Grid&lt;Op/Cl&lt;xxOO
11DIOD1ADIOD1C                 0.1                    CLOSED
11DIOD3ADIOD3C                 0.1
11DIOD5ADIOD5C                 0.1
11DIOD4ADIOD4C                 0.1
11DIOD6ADIOD6C                 0.1
11DIOD2ADIOD2C                 0.1                    CLOSED
C .....^.....^.........^.........^.........^xxxxxxxxx^.....^...^.....^.....^xx^^
```

Remarks:

No grid signal - Diode

Breaker Modeling - Examples

Synchronous Closing Control:

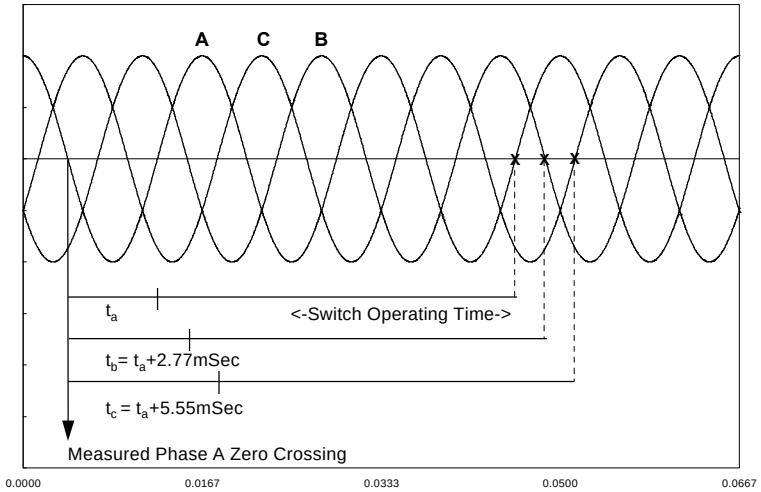

System Modeling Techniques *Volume 2, Slide 82*

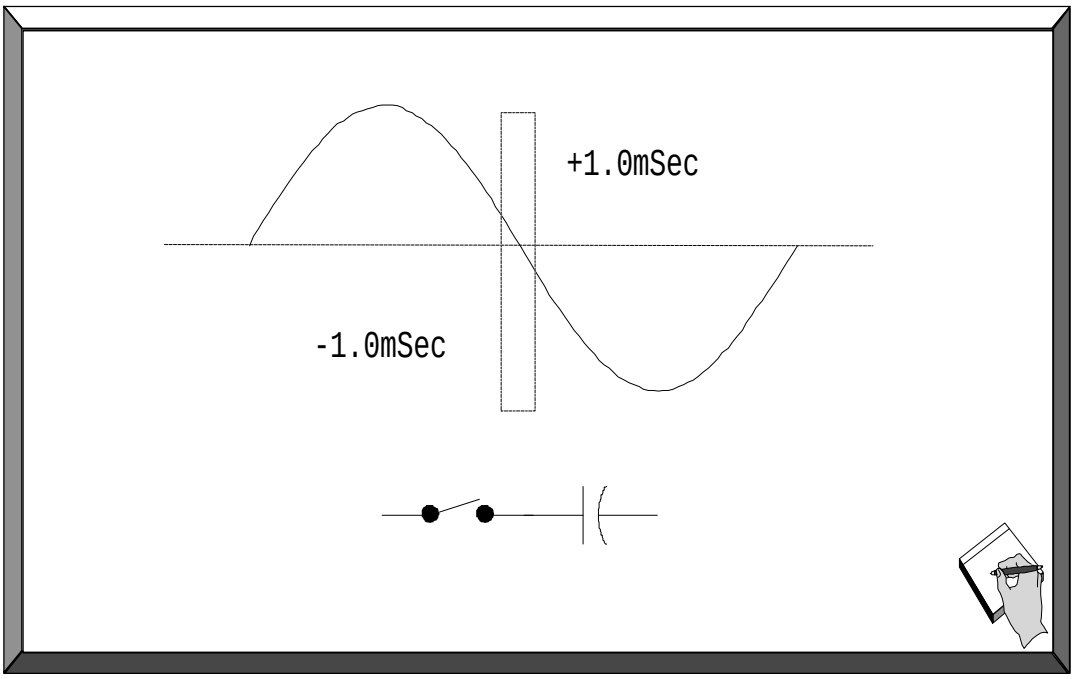

Breaker Modeling - Examples

Synchronous Opening Control:

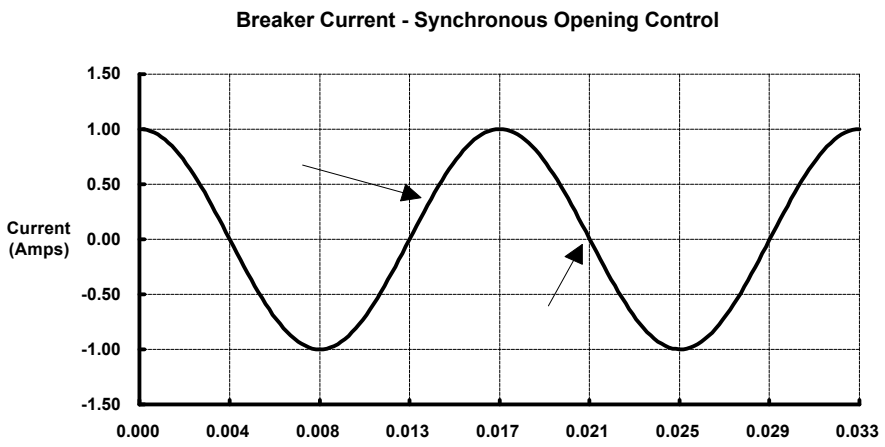

Modeling Sources

```
C <--Bus<I<-----Ampl<-----Freq<----Phase<-------A1<------T1><---Tstart<----Tstop
14 SRC1A     93897.0      60.0       0.0                          -1.0      9999
14 SRC1B     93897.0      60.0    -120.0                          -1.0      9999
14 SRC1C     93897.0      60.0     120.0                          -1.0      9999
C .....^.^.........^.........^.........^.........^........^..........^.........^
BLANK END OF SOURCE DATA
```

Note: 115kV Source

Node Voltage or Injected Current:

Type 11: Step Function
Type 14: Cosine Function (peak value)

Type:
0: Voltage Source
-1: Current Source

Rule Book: 10.3

Modeling Induction Motors

- Universal Machine (UM)
  - Single-phase, two-phase, three-phase, and doubly fed induction machines
  - Type 4 - Three-phase induction machine (three phase rotor) - most common
  - Machine data / requires preparation of data

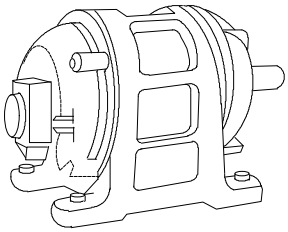

- Universal Machine - Type 40
  - Three-phase induction machine
  - Nameplate data

System Modeling Techniques *Volume 2, Slide 85*

Machine mechanical parameters >> Electrical equivalent:

Shaft mass (moment of inertia) <> Capacitance

1 kg-m^2 <> 1 Farad

Shaft friction (viscous damping) <> Conductance

1 N - m/rad/sec <> 1 Mho

Torque <> Current

1 N-m <> 1 amp

Induction Motors - Typical Data

Approximate Constants for Three-Phase Induction Motors
(Clark, Vol 2):

Rating (HP)	Full Load Efficiency (%)	Full Load Power Factor (%)	Full Load Slip (%)	R and X in per-unit Xs+Xr (pu)	Xm (pu)	Rs (pu)	Rr (pu)
<5	75-80	75-85	3.0-5.0	0.10-0.14	1.6-2.2	0.040-0.06	0.040-0.06
5-25	80-88	82-90	2.5-4.0	0.12-0.16	2.0-2.8	0.035-0.05	0.035-0.05
25-200	86-92	84-91	2.0-3.0	0.15-0.17	2.2-3.2	0.030-0.04	0.030-0.04
200-1000	91-93	85-92	1.5-2.5	0.15-0.17	2.4-3.6	0.025-0.03	0.020-0.03
>1000	93-94	88-93	1.0	0.15-0.17	2.6-4.0	0.015-0.02	0.015-0.025

Example Induction Motor - Type 4

Example induction motor (using typical data):

Rating:	25 Hp, 3-phase, 4-pole, 60 Hz, 480 Volt
Efficiency:	86%
Power Factor:	84%
Full Load Slip:	2.5%
$X_S = X_R$:	0.075 pu
X_M:	2.2 pu
$R_S = R_R$:	0.03 pu

$$\text{Speed} = \frac{120f}{p} = \frac{120 * 60}{4} = 1800\text{RPM} = 188.5\text{rad/sec}$$

Machine Parameter Calculation

```
C         Mech  TACS NP     RJ           DCOEF         EPSOM          FREQ
C <-<-<<<<----><-----<><------------><------------><------------><------------>
 4    111ROTOR1       2                                                  60.0
C .^.^^^^.....^xxxxx..^.............^.............^.............^............^
C
C     OMEGM         LMUD    I      LMSD         FLXSD         FLXRD
C ------------<------------>-<------------><------------><------------>
                     0.06378
C ...........^.............^^.............^.............^.............^
C
C  THETAM           LMUQ    I      LMSQ         FLXSQ         FLXRQ
C ------------<------------>-<------------><------------><------------>
                     0.06378
C ...........^.............^^.............^.............^.............^
C
C AMPLUM-SLIP     ANGLUM      BUSF  BUSM
C -----------><--------------<-----<-----<-----------------------------------
          2.5                     ADJUST
C ...........^........................^
```

$$L_{m\phi} = 2.2 * 0.02367H = 0.05214H$$

$$L_{MUD} = L_{MUQ} = \sqrt{\frac{3}{2}} L_{m\phi} = 0.06386H$$

Rule Book: 10.12.10

Base Impedance:

$$Z_{base} = \frac{V^2}{\left[\left[(HP * 746)\right] / (\eta * PF)\right]} = \frac{480^2}{\left[\left[(25 * 746)\right] / (0.86 * 0.84)\right]} = 8.924\Omega$$

Note:

- Bus ROTOR1 = mechanical node (moment of inertial = capacitance)
- Bus ADJUST = mechanical node (torque = current)

Machine Parameter Calculation - cont

```
C
C      RESIS       LLEAK      BUS1  BUS2 XTACSI      CUR
C ------------<-------------<-----<-----<-----<<------------>
                            MOTORA            1
        0.2677     0.0017754MOTORB            1
        0.2677     0.0017754MOTORC            1
C ...........^.............^.....^.....^.....^^.............^
C
C      RESIS       LLEAK      BUS1  BUS2 XTACSI      CUR
C ------------<-------------<-----<-----<-----<<------------>
        0.2677     0.0017754BUSR_B
        0.2677     0.0017754BUSR_C
                            BUSR_A
C ...........^.............^.....^.....^.....^^.............^
BLANK END OF ALL UM DATA
```

$$L_{Leak} = 0.075 * 0.02367H = 0.001775H$$

$$R_S = R_R = 0.03 * 8.924\Omega = 0.2677\Omega$$

Note:

- Bus MOTOR? = stator winding bus names (phases A, B, C)
- Bus BUSR_? = rotor winding bus names (phases B, C, A)

Machine Parameter Calculation - cont

```
/BRANCH
C
C <-------- Rotor Mass Moment of Intertia
C
C <---Nodes--><---Refer--><-ohms<---mH<---uF<--------------------------------Out
C <-Bus1<-Bus2<-Bus3<-Bus4<----R<----L<----C                                 V
  ROTOR1                                 8.72E6
C .....^.....^.....^.....^.....^.....^.....^.....^.....^.....^.....^.....^
C
C <-------- Motor Losses (friction and windage)
C
C <---Nodes--><---Refer--><-ohms<---mH<---uF<--------------------------------Out
C <-Bus1<-Bus2<-Bus3<-Bus4<----R<----L<----C                                 V
        ROTOR1              37.99
C .....^.....^.....^.....^.....^.....^.....^.....^.....^.....^.....^.....^
/SOURCE
C
C <-------- Adjustable Current Source for Torque Compensation
C
C --Bus><><-----Ampl<-----Freq<----Phase<-------A1<------T1><---Tstart<----Tstop
14ADJUST-1 -0.000001   0.00001                                -1.00E-3      9999
C .....^.^.........^.........^.........^.........^........^..........^.........^
14LDTORQ-1  -101.900   0.00001                                150.0E-3      9999
C .....^.^.........^.........^.........^.........^........^..........^.........^
```

Note: step change in torque at 150 mSeconds

$$\text{Torque} = \frac{(\text{HP} * 746)}{\left[\left(1 - \text{Slip}\right) * \omega\right]} = \frac{(25 * 746)}{\left[(1 - 0.03) * 188.5\right]} = 101.9\text{N} - \text{M}$$

$$\text{H} = \frac{\frac{1}{2}\omega^2 \text{J}}{\text{VA}}$$

H = Inertia Constant (6-9)
J = Moment of Inertia

For H = 6, J = 8.72E6uF

$$\text{R}_{\text{losses}} = \frac{\omega}{\text{T} \quad * \text{Losses}(\%)} = \frac{188.5}{101.9 * 0.05} = 36.99\Omega$$

Type 40 Induction Motor Model

- Required data to setup Type 40 motor:
  - Initial condition: network connection, operating frequency, initial slip
  - Full load characteristics: MVA, voltage, power factor, efficiency, slip
  - Starting (locked rotor) data: current, torque, current at full and reduced voltage, breakdown torque
  - No-load magnetic saturation data
  - Mechanical data: Inertia, load type, bus names

Example Induction Motor - Type 40

Example induction motor:

Rating:	11000 Hp, 3-phase, 4-pole, 60 Hz, 6600 Volts
Efficiency:	98.5%
Power Factor:	90.6%
Full Load Slip:	0.622%
Design Ratio:	0.55 (deep bar rotor)
Starting Current:	8 pu
Starting Torque:	1.457 pu

Type 40 Induction Motor Setup

```
C <-BusA <------Slip<-----Freq
40BRPH1A       100.0      60.0
C .....^xx.........^.........^
40BRPH1B
40BRPH1C
C .....^
DESIGN RATIO            0.55
C <---PFLD<-----VFLD<----PFFLD<----EFFLD<-----SFLD
  -11000.0    6600.0     0.906     0.985   0.00622
C .......^.........^.........^.........^.........^
C <---CSTA<-----TRAT<-----VRED<-----CRED
       8.0     1.457     0.758      6.03
C .......^.........^.........^.........^
C <---CSAT<----TQMAX
       0.0       3.6
C .......^.........^
C <-Poles-<---HINERT<-BusM
 4         -50590.0 BUSM1
C xxxxxxxx.........^.....^
 1 1 1 1 1 1 1 1
C .^.^.^.^.^.^.^
C <--VLTQ1<----VLTQ2<----VLTQ3<----VLTQ4<----VLTQ5<----VLTQ6
       1.0       0.8
C .......^.........^.........^.........^.........^.........^
BLANK ENDING ALL UM DATA
```

Rule Book: 10.12.21

Reduced voltage startup voltage:	0.758 pu
Starting current at reduced voltage:	6.03 pu
Full load voltage breakdown torque:	3.5 pu
Rotor mass initeria:	50590 LB-FT^2
Initial slip (standstill):	100%

Type 40 Initialization (startup)

Machine Startup - low voltage, three-phase source:

```
C
C Low Voltage Three-Phase Source for Type 40 Initialization
C
C BUS-->I<AMPLITUDE<FREQUENCY<--TOIPHIO<-------A1<------T1><---TSTART<----TSTOP
14 STARA        0.01      60.0         0                          -1.0     9999.
14 STARB        0.01      60.0      -120                          -1.0     9999.
14 STARC        0.01      60.0       120                          -1.0     9999.
C .....^.^.........^.........^.........^.........^.........^........^..........^.........^
C
```

```
C
C Low Voltage Three-Phase Source (disconnect) for Type 40 Initialization
C
C BUS-->BUS--><---TCLOSE<----TOPEN<-------IE<----FLASH<--REQUEST<-----TARGET<--O
   STARAMOTORA -50.00E-3   50.E-06
   STARBMOTORB -50.00E-3   50.E-06
   STARCMOTORC -50.00E-3   50.E-06
C .....^.....^.........^.........^.........^.........^.........^.........^..........^...^
C
```

Introduction to TACS

- Transient Analysis of Control System (TACS) was developed by L. Dube during 1976-1977. During 1983 and 1984, Ma Ren-ming made very extensive improvements to TACS modeling.

- TACS was originally designed to simulate HVDC converter operation. However, after TACS was developed, it has been used to simulate all types of dynamic systems.

- TACS consists mainly of:
  - Transfer function blocks
  - Signal sources
  - Special devices

Solution Method for Network

- Network components are simply represented by their resistive equivalents. For energy storage components, including distributed parameter system components, parallel dependent current sources are added to their resistive equivalents.

- Differential equations describing the system transient behavior are converted into linear algebraic equations with unknown node voltages as the state variables.

System Modeling Techniques *Volume 2, Slide 96*

Solution Methods for Network - cont

- At each time step, the network configuration is examined by checking the switch table. According to the actual network connection, the Y matrix is updated and network nodal equations are formulated as

  [Y][V]=[I],

  where,

  [Y] is a symmetric nodal conductance matrix,

  [V] is vector of node voltages, and

  [I] is a dependant current vector known from a previous time step.
- The system of linear equations are solved for the nodal voltages.
- A dependent current vector is assembled for use of next time step.

Solution Methods for TACS

- Why is TACS System Solved Separately from Network ?
  - To solve TACS equations simultaneously with the electric network is difficult.
  - Equations for a control system are quite different from those for an electric network.
  - Control model matrices are usually unsymmetric and cannot be represented as equivalent resistive networks.
  - TACS models are solved separately and interface with the network solution at each time step.

System Modeling Techniques *Volume 2, Slide 98*

Solution Methods for TACS - cont

- Solution Method for Transfer Function Block:

$$X(s) = G(s)U(s) \qquad \text{Eq.1a}$$

Where,
X(s) - output,
U(s) - input,
G(s) - transfer function

$$G(s) = K\frac{N_o + N_1 s + N_2 s^2 + \ldots\ldots + N_m s^m}{D_0 + D_1 s + D_2 s^2 + \ldots\ldots + D_n s^n} \qquad m \le n. \qquad \text{Eq.1b}$$

For steady-state frequency response, the Laplace operator **S** is replaced by jω.

Solution Methods for TACS - cont

For transient solutions, s is replaced by the differential operator d/dt. Eq. 1 is converted into a linear n-th order differential equation as given in Eq.2

$$D_0 x + D_1 \frac{dx}{dt} + \ldots\ldots + D_n \frac{d^n x}{dt^n} = K(N_0 u + N_1 \frac{du}{dt} + \ldots\ldots + N_m \frac{d^m u}{dt^m}) \quad , \quad \textbf{Eq.2}$$

By introducing internal variables,

$$x_i = \frac{dx_{i-1}}{dt}, \qquad i = 1, \ldots\ldots, n \qquad \textbf{Eq.3a}$$

$$u_j = \frac{du_{j-1}}{dt}, \qquad j = 1, \ldots\ldots, m \qquad \textbf{Eq.3b}$$

Eq.2 becomes an algebraic equation,

$$D_0 x + D_1 x_1 \ldots + D_n x_n = K(N_0 u + N_1 u_1 \ldots + N_m u_m) \quad , \quad \textbf{Eq.4}$$

Solution Methods for TACS - cont

The internal variables given in Eq.3a and Eq.3b can be converted into central difference equations with the Trapezoidal rule

$$x_i = \frac{dx_{i-1}}{dt}$$

$$\frac{x_i(t)+x_i(t-\Delta t)}{2} = \frac{x_{i-1}(t)-x_{i-1}(t-\Delta t)}{\Delta t}$$

$$\begin{aligned} x_i(t) &= \tfrac{2}{\Delta t}\{x_{i-1}(t) - x_{i-1}(t-\Delta t)\} - x_i(t-\Delta t) \\ &= \tfrac{2}{\Delta t}x_{i-1}(t) - \{x_i(t-\Delta t) + \tfrac{2}{\Delta t}x_{i-1}(t-\Delta t)\} \end{aligned} \quad , \quad \textbf{Eq.5a}$$

Similarly,

$$u_j(t) = \tfrac{2}{\Delta t}u_{j-1}(t) - \{u_j(t-\Delta t) + \tfrac{2}{\Delta t}u_{j-1}(t-\Delta t)\} \quad , \quad \textbf{Eq.5b}$$

Solution Methods for TACS - cont

Using Eq.5a and Eq.5b, Eq.4 can be rewritten as a single output-input relationship for the transient solution of the control system.

$$cx(t) = Kdu(t) + hist(t - \Delta t) \quad , \text{Eq.6}$$

Where, C and d are determined from the transfer function coefficients and a selected time step size.

After the solution at each time step, the history term must be updated for the solution over the next time step.

A zero order transfer function is a special case of Eq.6 where constant c=d=K=1 and hist=0.

Solution Methods for TACS - cont

When transfer function blocks are interconnected, the entire system can be characterized by a matrix format equation.

$$[c_{xx}][x] + [kd_{xu}][u] = [hist]$$

The equation is solved by first performing a triangular factorization on [C] and [kd] before entering the time step loop. In each time step, [x] is then found by

- assembling the right-hand side [hist],
- performing a downward operation on it,
- doing a back substitution to obtain [x], and
- updating the history terms of each block.

Interface between TACS & Network

One Time Step Delay

- Network output can be used as TACS input over the same time step, however,
- TACS output can become network input only over the next time step.

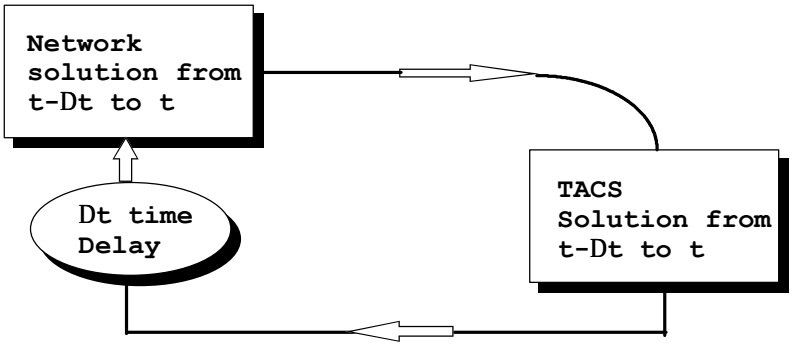

System Modeling Techniques *Volume 2, Slide 104*

TACS Capability and Application Areas

- HVDC converter controls
- Excitation and voltage regulation control
- Arcing characteristics
- Circuit breaker restriking
- Current limiting gaps in surge arresters
- Variable load
- SVC, TCR
- Wind turbine dynamics
- Solid state switching, STATCON, and FACTS
- SMES simulation
- PWM drive and motor controls

System Modeling Techniques *Volume 2, Slide 105*

TACS Models: Limiters

Windup Limiter(Static Limiter):

The output of a transfer function block is just clipped, without affecting the dynamic behavior of the transfer function block on the input side itself.

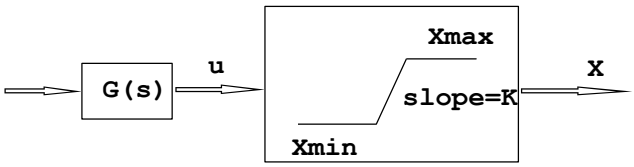


```
X=Ku,   if Xmin < Ku < Xmax,
X=Xmin, if Ku <Xmin,
X=Xmax, if Ku >Xmax.
```

These three equations are special case of Eq.6, with c=d=1, hist=0 inside the limits, and c=1, d=0, hist=(Xmax or Xmin) at the limit.

TACS Models: Limiters - cont

Non-windup Limiter(Dynamic Limiter):

The dynamic behavior of the transfer function block is changed by the limiting action. This type of limiter is allowed on first-order transfer functions with no zeros.

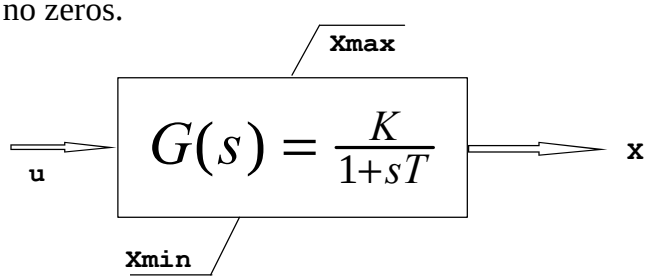


```
X+TdX/dt=Ku,   if Xmin < X < Xmax,
       X=Xmin, if X .LE. Xmin and (Ku-X) < 0,
       X=Xmax, if X .GE. Xmax and (Ku-X) > 0.
```

These equations are special cases of Eq.6, with d=K, c=1+2T/Δt, hist=Ku(t-Δt)-(1-2T/Δt)X(t-Δt).

TACS Models: Signal Sources

- Built-in Signal Sources: User needs to provide data specification for these signal sources.

Single rectangular pulse (Level Signal): Type-11

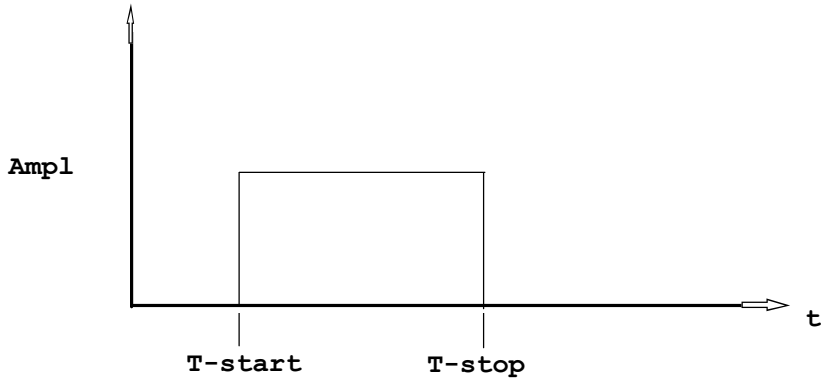

TACS Models: Signal Sources - cont

Sinusoidal function: Type-14

`Output = Ampl*Cos(wt + f)`

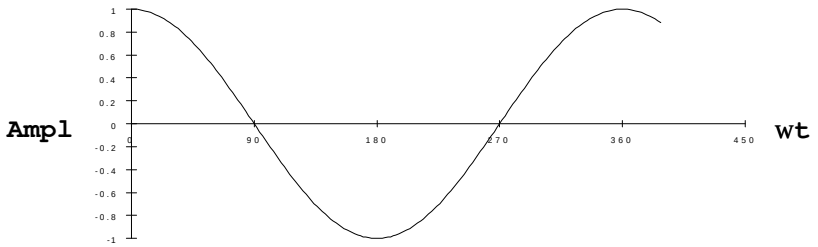

TACS Models: Signal Sources - cont

Repetitive Pulse: Type-23

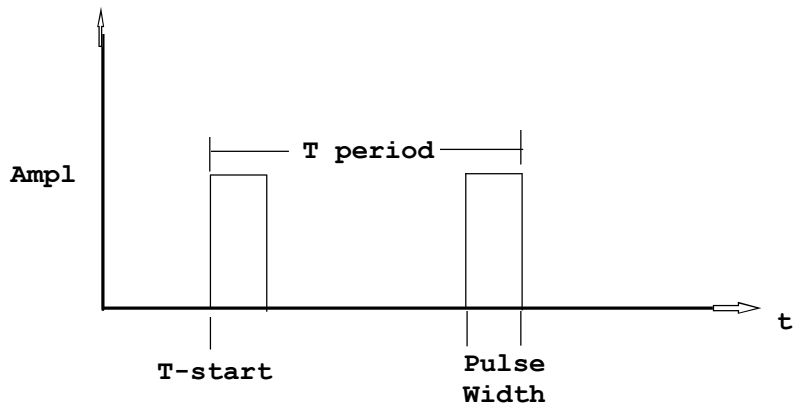

TACS Models: Signal Sources - cont

Repetitive Ramp: Type-24

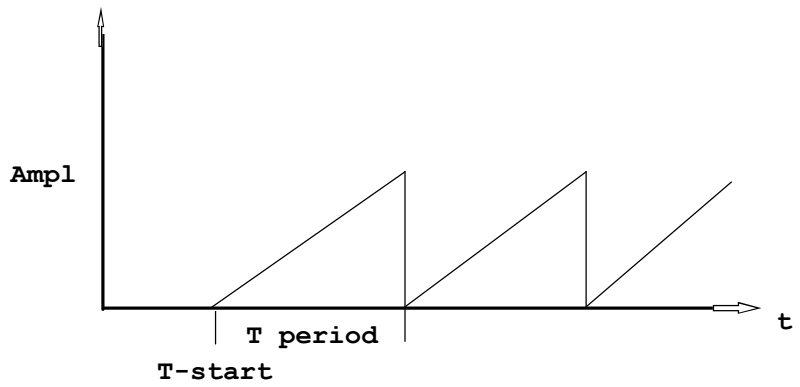

TACS Models: Signal Sources - cont

Node Voltage Coupling:	Type-90
Switch Current Coupling:	Type-91
Special Network Variable :	Type-92 (e.g., rotor q coupling)
Switch Status Monitor:	Type-93

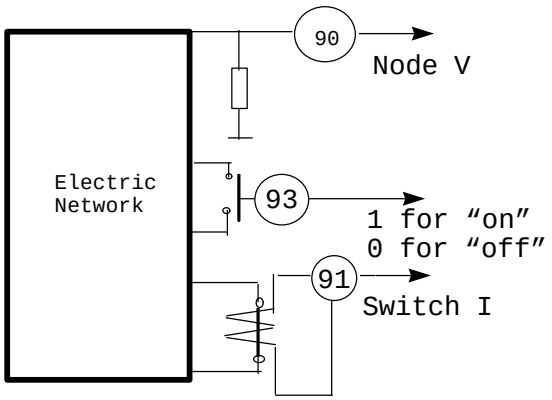

Any node voltage or switch current of the electric network can be coupled through type-90 and type-91 sources into the TACS models. These sources are often used to sample the network quantities for deriving adequate system control signals.

TACS Models: Special Devices

- FORTRAN-Defined (Rule-book, pg 14-20)
  - Operators:

Algebraic Operators:
+, -, *, /, **

Relation Operators:
.EQ. , .NE. , .LT. , .LE. , .GE. , GT.

Logical Operators:
.OR. , .AND. , .NOT.

TACS Models: Special Devices - cont

FORTRAN Functions:

SIN, COS, TAN, COTAN, SINH, COSH, TANH, (in rad)
ASIN, ACOS, ATAN, (in rad)
EXP, LOG, LOG10, SQRT, ABS

Special Functions:

RAD, DEG, SIGN, RAN, ...

Note: A FORTRAN assignment statement of the form

BUSVLT=BUSVLT + {Arithmetic Expression)

is not allowed.

No FORTRAN if statement in the current version.

TACS Models: Special Devices - cont

- Built-in Special Devices (Rule-book, pg 14-22)

  Seventeen built-in special devices are available. For the motor-drive simulation, the following devices are especially useful.

Frequency-sensor:	Code # 50,
Transport delay:	Code # 53,
Controlled integrator:	Code # 58,
Sample and track:	Code # 62,
Accumulator and counter:	Code # 65,
RMS value:	Code # 66.

Problems Associated with TACS

- One Step Time Delay Problem

  One step time delay does not cause problem in most studies where the involved frequency is relatively low and the phenomenon is non-repetitive in nature. Under such circumstance, the error introduced by one step time delay is usually negligible if the time step used in the simulation is selected small enough. When the phenomenon is high frequency and repetitive in nature, the error caused by one step time delay can be accumulated and cause numerical instability.

- TACS Initialization Problem

  The automatic initialization of TACS variables is complicated and not available in the current version because of difficulties introduced by a variety of TACS initial conditions. User must supply initial conditions in complicated cases and for most special devices. This, in many cases, becomes impractical.

System Modeling Techniques *Volume 2, Slide 116*

Introduction to EMTP Data Modules

- Overview of EMTP Data Module (EDM) Development:
  - Creating a data module
  - Data module usage
  - Examples

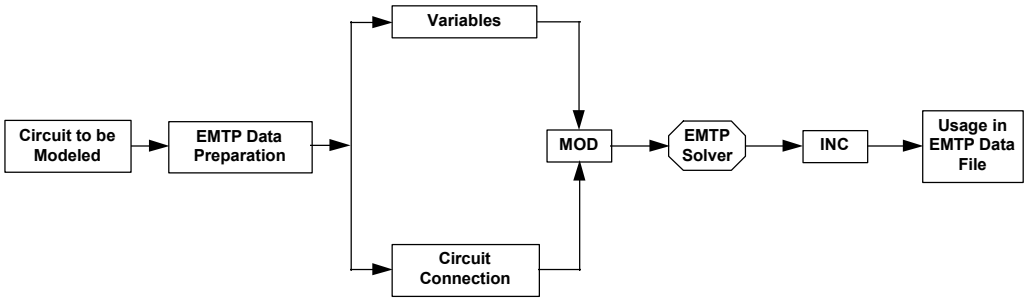

System Modeling Techniques *Volume 2, Slide 117*

An EMTP Data Module (EDM) is an input data format which is accepted by the EMTP preprocessor to form a regular data case file. A module is similar to a procedure or subroutine in a programming language. The user calls the module, passes a number of parameters, and the module returns the proper EMTP data.

In many cases input modules can help users greatly reduce the amount of work required to develop EMTP data cases. In addition, modules help to build cases with better organization and readability.

EMTP Data Modules - When and Why?

- In general, a user should have already developed the equivalent model in an EMTP data case, and then wish to convert the data into a reusable data module.
- If a component/model is only going to be used once, the user will need to determine the usefulness of converting it into a module.
- A significant advantage of module usage is that they can be shared by a group, with one person responsible for development / maintenance and the others having access to the models.

EMTP Data Modules - Overview

- Grouping of Input Data (/ Cards)
  - Grouping of data logically, rather than by EMTP rules
- Argument Substitution
  - Character strings (bus names), numbers
- Transportability and Reliability
- Ease of Use
  - $INCLUDE special request card

Rule Book: 19.1

Grouping of Input Data

- Grouping of EMTP data is accomplished using "/" cards:
  - Method allows data to be grouped logically, rather than with the traditional EMTP structure:

```
Miscellaneous Data Cards
Branch Data
BLANK End of Branch Data
Switch Data
Blank End of Switch Data
etc.
```

  - Allows large complex data sets (i.e. PWM inverter/motor) to be divided into smaller more manageable groups of data.
  - Six levels of nesting are allowed in data modules.

Argument Substitution

- Data modules provide the facility to substitute variables (arguments), rather that simply inserting a piece of data into the larger data case.
- Concept is similar to programming procedures or functions.

```
Function Root (iRoot, value)
Dim iRoot as Integer
Dim value as Real
   Root = value^iRoot
End Function
```

- Arguments may be strings or numeric quantities.

Transportability/Reliability & Ease of Use

- Each data module resides in a separate data file - once development and testing is completed it requires no maintenance.
- Possibility of unknown errors is reduced.
- Modules can be reused in the same data case.
- Modules can be reused in different studies.
- Modules are easily incorporated using “$INCLUDE” cards.

EDM Preamble / Declaration

- A module may have three types of declarations, ‘ARG’, ‘NUM’, and ‘DUM’.
  - ‘ARG’ argument
  - ‘NUM’ numeric constants
  - ‘DUM’ internal or dummy variables

```
ARG TERML,                                          -   ; NODES
ZERORE, ZEROINDUCTAN, POSIRE, POSIINDUCTAN,         -   ; SEQUENCE IMP.
AMPLITUDES, TSTARTTIME, TSTOPTIMES, RDAMP1              ; V, TSTART, TSTOP
C
NUM                                                 -   ;
ZERORE, ZEROINDUCTAN, POSIRE, POSIINDUCTAN,         -   ; SEQUENCE IMP.
AMPLITUDES, TSTARTTIME, TSTOPTIMES, RDAMP1              ; V, TSTART, TSTOP
C
DUM INTERA, INTERB, INTERC                              ; INTERNAL SOURCE
```

System Modeling Techniques *Volume 2, Slide 123*

The type ‘ARG’ stands for argument and is used to pass all external variables (numeric or character string). to the module. The variable type ‘ARG’ does not justify. Rather, it replaces the pattern as specified in the argument list (a variable may be padded with blanks by using the character ‘#’.

The type ‘NUM’ is a subset of type ‘ARG’, and informs the program to expect a numeric string rather than an alphanumeric string. These variables replace numeric fields in the EMTP data file. When specifying a numeric variable, the user must refer to the actual EMTP data. This is required because the numeric string must be the same length as the numeric field. If the field width is ten characters long, then the variable representing that field must also be ten characters long (‘_’ may be used to embed blank characters). In the usage of the module ($INCLUDE), if the user specifies a numeric string that is shorter than the specified field width the program will automatically right justify the quantity.

EDM Preamble - Special Characters

- Special characters:

'-'	continuation character
';'	indicate rest of line is comment
'#'	indicate imbedded blanks
'_'	indicate imbedded blanks in numeric field
'?','@'	one character substitution in column 80

External Variables - Type ARG

- Type ‘ARG’ stands for argument and is used to pass all external variables to the module.
- All external variables (numeric or character string) must be declared as type ‘ARG’.
- Variable type ‘ARG’ does not justify. It replaces a pattern as given in the argument list.
- A variable can be padded with blanks using the special character ‘#’.

EDM Guidelines - Node Name Creation

- Single bus and three-phase node name examples:

```
BUS01A - generates a name of:   BUS01A
                                .....^

BUS##A - generates a name of:   BUS  A
                                .....^
```

```
C <---Nodes--><---Refer--><-ohms<---mH<---uF
C <-Bus1<-Bus2<-Bus3<-Bus4<----R<----L<----C
  FAULTA                  0.001
  FAULTB                  0.001
  FAULTC                  0.001
C .....^.....^.....^.....^.....^.....^.....^
```

```
C <---Nodes--><---Refer--><-ohms<---mH<---uF
C <-Bus1<-Bus2<-Bus3<-Bus4<----R<----L<----C
  BUS01A                  0.001
  BUS01B                  0.001
  BUS01C                  0.001
C .....^.....^.....^.....^.....^.....^.....^
```

Numeric Variables - Type NUM

- Type ‘NUM’ is a subset of type ‘ARG’ and informs the program to expect a numeric string instead of an alphanumeric string.
- These variables replace numeric fields in the EMTP data.
- Users must refer to the actual EMTP rules - specify the width of the variable as the full width of the numeric field.
- Users may use the special character ‘_’ to imbed blanks in the field.
- In the “$INCLUDE” statement, users may specify a numeric string that is less than the variable width - If this occurs the quantity is right justified.

EDM Guidelines - Numeric Quantities

- For example: RDAMP1 refers to a resistor from nodes BUS01 to BUS02

```
C <---Nodes--><---Refer--><-Ohms<---mH<---uF
C Bus1->Bus2->Bus3->Bus4-><----R<----L<----C
  BUS01ABUS02A            RDAMP1
C .....^.....^.....^.....^.....^.....^.....^
```

- When the module is used: ‘230KV’, ‘SEND1’, and ‘200.00’ are used

```
C <---Nodes--><---Refer--><-Ohms<---mH<---uF
C Bus1->Bus2->Bus3->Bus4-><----R<----L<----C
  230KVASEND1A            200.00
C .....^.....^.....^.....^.....^.....^.....^
```

Dummy Variables - Type DUM

- Type ‘DUM’ refers to internal variables of a module.
- Variables of type ‘DUM’ must have a six character width and should begin with an alphanumeric character.
- An internal variable is replaced with a unique name created by the program.
- The program currently has 6000 dummy variables available.

Seed Key	First Name	Last Name
DUM	DUM000	DUM999
DMU	DMU000	DMU999
MDU	MDU000	MDU999
MUD	MUD000	MUD999
UMD	UMD000	UMD999
UDM	UDM000	UDM999

The type ‘DUM’ refers to internal variables (dummy) of a module. Variables of type ‘DUM’ must have a six character width and should begin with an alphanumeric character. An internal variable is replaced with a unique name created by the program. The name is composed by adding a number 000 to 999 to the term DUM. For example, the first dummy variable would be named ‘DUM000’ and the thousandth dummy variable would be ‘DUM999’.

EDM Body

- The input formats and rules that need to be followed while building a MOD file are very similar to those while developing a regular EMTP data file.
- A major difference between a MOD file and a regular input file is that in the MOD file general character strings are used to replace all of the determined node names and numerical values specified in the regular input file.
- In addition, all of the used character strings need to be declared as the proper type.

EDM Body - Data Sorting

- Data sorting - "/" cards:

/BRANCH	indicate branch data
/SWITCH	indicate switch data
/SOURCE	indicate source data
/TACS	indicate TACS data
/OUTPUT	indicate output data
/PLOT	indicate plot data
/REQUEST	indicate special request card
/STATISTICS	indicate statistics request cards
/END MODULE	indicate end of a data module

System Modeling Techniques *Volume 2, Slide 131*

EDM Body - '$' Request Cards

- '$' cards request the program to:

  [1] Read another input file

  [2] Set file attributes, such as directory

  [3] Modify the contents of card images using argument list

  [4] Change the 'seed key' of internal variables

Special request cards:

$INCLUDE	read another input file
$SUFFIX	define file type (i.e. .INC)
$PREFIX	define file path (i.e. C:\EMTP\MODULE)
$DUMMY	defined dummy variable name
$EOF	indicates end of file

Note: avoid using BLANK ENDS and $DUMMY in a module

EDM Guidelines - Converting MOD to INC

- Process for Creating Modules:

  [1] Write Module File (*.MOD)

  [2] Convert to Include File (*.INC)

```
MODULE
D:\EMTPFILE\WORKBOOK\VOLUME2\3PHEQUIV.MOD
D:\EMTPFILE\WORKBOOK\VOLUME2\3PHEQUIV.INC
STOP
```

  [3] Use Module via $INCLUDE Request Card

```
$PREFIX, D:\EMTPFILE\WORKBOOK\VOLUME2\
$SUFFIX, .INC
```

System Modeling Techniques *Volume 2, Slide 133*

In general, the second and third lines give the paths leading to the places where MOD and INC files are stored. The MODULE command can be repeated as many times as necessary in a batch-mode execution.

After running the above MAKEMOD.DAT case, the EMTP generates the corresponding INC file. This file keeps all the circuit connections as specified in the MOD file, and the EMTP also generates connection codes for the EMTP internal matrix. The user does not need to pay attention to such codes (however, do not change anything in the INC file, all changes to the module should be made to the MOD file and then recompiled).

Module Usage

- $INCLUDE
  - Instructs program to read another input file:

```
$INCLUDE  filename  argument, argument, argument, - ; comment
          argument, argument                        ; comment
```

- $PREFIX / $SUFFIX
  - Informs the program of common file attributes (path, extension):

```
$PREFIX  prefix name
$SUFFIX  suffix name
```

- BLANK Cards

System Modeling Techniques *Volume 2, Slide 134*

An input module is easily inserted into a data case as an include file. The user needs to use an '$INCLUDE' statement with proper number of parameters. The lines:

$PREFIX C:\ETK\MODULE\INCFILE\

$SUFFIX .INC

provide information regarding the path and file extension for the include files. An alternate format would be to include the entire path name in the '$INCLUDE' statement. For example, if the file name 'DATAMOD1' was called using the '$INCLUDE' statement the following path/file string would be passed to the EMTP.

$INCLUDE DATAMOD1

C:\ETK\MODULE\INCFILE\DATAMOD1.INC

Module Usage - Blank Cards

- Blank cards are required to terminate EMTP data classes.
- Standard blank cards may <u>not</u> be used within modules and data files using modules.
- The keyword “BLANK ENDS” is used at the end of the data file.

```
BLANK ENDS TACS
BLANK ENDS BRANCH
BLANK ENDS SWITCH
BLANK ENDS SOURCE
BLANK ENDS OUTPUT
BLANK ENDS PLOT
BEGIN NEW DATA CASE
BLANK END OF ALL DATA CASES
```

EDM Guidelines - Some General Rules

- There are several important rules to follow when creating modules. They include:

  [1] Each data block must start with the proper '/' card

  [2] A '$' card can be part of a data block

  [3] If an '$INCLUDE' card is embedded in a data block then it must be followed with the proper '/' card

  [4] The first eleven (11) characters of a line in a module must not be 'BLANK ENDS'. This pattern is a keyword and is used at the end of the EMTP data file.

  [5] The body of a module must end with a '/ENDMODULE' card, followed by a '$EOF' card.

Module Example #1 - 3PHEQUIV

- Three-phase source equivalent - **3PHEQUIV**

MODULE: 3PHEQUIV

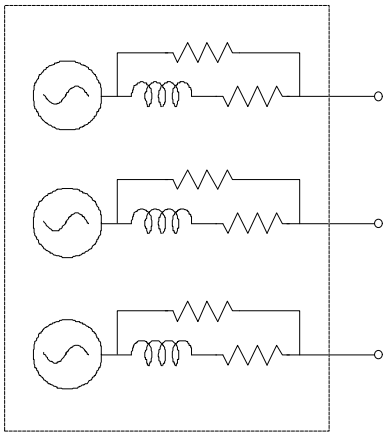

System Modeling Techniques *Volume 2, Slide 137*

The module, 3PHEQUIV, is used to create a three-phase equivalent source representation. The source impedance is obtained by using positive and zero sequence impedance in a mutually coupled R-L model (type 51, 52, 53...), in parallel with a damping resistor (simple RLC). The voltage is obtained using a sinusoidal voltage source (Type 14).

Module 3PHEQUIV - Argument List

Argument	Description	Type	Length
TERML	Output terminal name 5 characters + (A)(B)(C)	ARG	5
ZERORE	Zero sequence source resistance (Ω)	NUM	6
ZEROINDUCTAN	Zero sequence source inductance (mH)	NUM	12
POSIRE	Positive sequence source resistance (Ω)	NUM	6
POSIINDUCTAN	Positive sequence source inductance (mH)	NUM	12
AMPLITUDES	Voltage source (peak voltage, phase-to-ground)	NUM	10
TSTARTTIME	Start time (sec), -1.0 for steady-state	NUM	10
TSTOPTIMES	Stop time (sec), 9999. for entire simulation	NUM	10
RDAMP1	Parallel damping resistor (Ω)	NUM	6
COM	Comment	N/A	N/A
INTERA(B)(C)	Internal nodes for voltage source connection	DUM	6

System Modeling Techniques *Volume 2, Slide 138*

Module 3PHEQUIV - .MOD File

```
ARG TERML,                                        -   ; ELECTRIC NODES
ZEROREZEROINDUCTAN, POSIREPOSIINDUCTAN,           -   ; SEQUENCE IMP.
AMPLITUDES, TSTARTTIME, TSTOPTIMES, RDAMP1            ; V, TSTART, TSTOP
C
NUM                                               -   ;
ZEROREZEROINDUCTAN, POSIREPOSIINDUCTAN,           -   ; SEQUENCE IMP.
AMPLITUDES, TSTARTTIME, TSTOPTIMES, RDAMP1            ; V, TSTART, TSTOP
C
DUM INTERA, INTERB, INTERC                            ; INTERNAL SOURCE CONN.
C
/BRANCH
C <---Nodes--><---Refer--><-Ohms<---------mH
C <-Bus1<-Bus2<-Bus3<-Bus4<----R<----------L
51TERMLAINTERA            ZEROREZEROINDUCTAN
C .....^.....^.....^.....^.....^...........^  Zero Sequence
52TERMLBINTERB            POSIREPOSIINDUCTAN
C .....^.....^xxxxxxxxxxxx.....^...........^  Positive Sequence
53TERMLCINTERC
C .....^.....^xxxxxxxxxxxx.....^...........^
C
C <---Nodes--><---Refer--><-Ohms<---mH<---uF<-------------------------------Out
C Bus1->Bus2->Bus3->Bus4-><----R<----L<----C                                 V
  TERMLAINTERA            RDAMP1
  TERMLBINTERB            RDAMP1
  TERMLCINTERC            RDAMP1
C .....^.....^.....^.....^.....^.....^.....^xxxxxxxxxxxxxxxxxxxxxxxxxxxxxxxxxxx^
C
/SOURCE
C <--Bus<I<-----Ampl<-----Freq<----Phase<-------A1<------T1><---Tstart<----Tstop
14INTERA 1AMPLITUDES      60.0       0.0                   TSTARTTIMETSTOPTIMES
14INTERB 1AMPLITUDES      60.0    -120.0                   TSTARTTIMETSTOPTIMES
14INTERC 1AMPLITUDES      60.0     120.0                   TSTARTTIMETSTOPTIMES
C .....^.^.........^.........^.........^.........^........^..........^.........^
/ENDMODULE
$EOF
```


A module (.MOD) file is then converted into an include (.INC) file using the EMTP solver and the following structure (MAKEMOD.DAT):

```
MODULE
C:\ETK\MODULE\MODFILE\3PHEQUIV.MOD
C:\ETK\MODULE\INCFILE\3PHEQUIV.INC
STOP
```

Module 3PHEQUIV - .INC File

```
KEND    7   32   44   14    7   32   44   14    7   14    7   32   14    7   32
       14    7   32   14   20   70   80    8   20   70   80    8   20   70   80
        8
KTEX    1    0    0    1    1    0    0    1    1    1    1    0    1    1    0
        1    1    0    1    0    0    0    1    0    0    0    1    0    0    0
        1
C EMTP Data Module: 3PHEQUIV
C
C Description: Three-Phase Equivalent Source
C
C Created: 5/2/94 (TEG/LT)  Last Updated: 5/2/94 (TEG)
C
C Usage: 3PHEQUIV TERML, R0, L0, R1, L1, VPEAK, TSTART, TSTOP, RDAMP1 ; COM
C
/BRANCH
C <---Nodes--><---Refer--><-Ohms<--------mH
C <-Bus1<-Bus2<-Bus3<-Bus4<----R<---------L
51TERMLAINTERA           ZEROREZEROINDUCTAN
C .....^.....^.....^.....^.....^...........^  Zero Sequence
52TERMLBINTERB           POSIREPOSIINDUCTAN
C .....^.....^xxxxxxxxxxxx.....^...........^  Positive Sequence
53TERMLCINTERC
C .....^.....^xxxxxxxxxxxx.....^...........^
C
C <---Nodes--><---Refer--><-Ohms<---mH<---uF<-------------------------------Out
C Bus1->Bus2->Bus3->Bus4-><----R<----L<----C                                 V
  TERMLAINTERA           RDAMP1
  TERMLBINTERB           RDAMP1
  TERMLCINTERC           RDAMP1
C .....^.....^.....^.....^.....^.....^.....^xxxxxxxxxxxxxxxxxxxxxxxxxxxxxxxxxxx^
C
/SOURCE
C <--Bus<I<-----Ampl<-----Freq<----Phase<-------A1<------T1><---Tstart<----Tstop
14INTERA 1AMPLITUDES      60.0      0.0                     TSTARTTIMETSTOPTIMES
14INTERB 1AMPLITUDES      60.0   -120.0                     TSTARTTIMETSTOPTIMES
14INTERC 1AMPLITUDES      60.0    120.0                     TSTARTTIMETSTOPTIMES
C .....^.^.........^.........^.........^.........^.........^.........^.........^
/ENDMODULE
$EOF **** END OF FILE ****
DATE AND TIME OF MODULE CONVERSION:    05/02/94  15.57.08
NUMBER OF ARGUMENTS DECLARED IN THIS MODULE:     9
NUMBER OF DUMMY VARIABLES DECLARED IN THIS MODULE:     3
```

Module 3PHEQUIV - Usage

```
BEGIN NEW DATA CASE
$PREFIX, C:\DOC\MODULE\INCFILE\
$SUFFIX, .INC
C
C <-------------------------------------------------Misc Data-----------------
C
C ----Dt<---Tmax<---Xopt<---Copt
  50E-06 100.E-3
C .....^.......^.......^.......^
C -Iprnt<--Iplot<-Idoubl<-Kssout<-Maxout<---Ipun<-Memsav<---Icat<-Nenerg
    5001       3       1       1       1       0       0       2       0
C .....^.......^.......^.......^.......^.......^.......^.......^.......^
C
C <-------------------------------------------------Circuit Data--------------
C
C Source Equivalent
C 2000 kVA, 6% Transformer, 480 V secondary (assume positive and zero seq equal)
C
C Usage: 3PHEQUIV TERML, R0, L0, R1, L1, VPEAK, -
C                 TSTART, TSTOP, RDAMP1 ; COM
C
$INCLUDE 3PHEQUIV 480VB, 0.001, 0.018, 0.001, 0.018, 391.92, -
                   -1.0, 9999.9, 10.0
C
C <-------------------------------------------------Nodal Output--------------
C
/OUTPUT
C
C BUS-->BUS-->BUS-->
  480VBA480VBB480VBC
C .....^.....^.....^
BLANK ENDS BRANCH
BLANK ENDS SWITCH
BLANK ENDS SOURCE
BLANK ENDS OUTPUT
BLANK ENDS PLOT
BLANK ENDS CASE
```

System Modeling Techniques *Volume 2, Slide 141*

Module Example #2 - 6PDIODE

- Three-phase, six-pulse diode bridge - **6PDIODE**

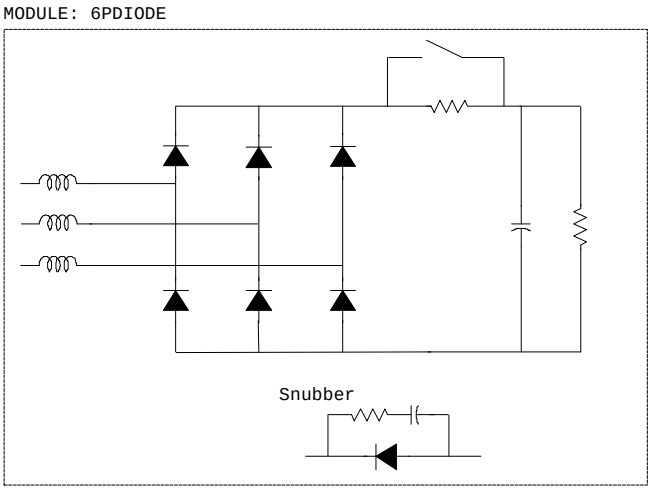

Module 6PDIODE - Argument List

Argument	Description	Type	Length
FRONT	Input terminal name 5 characters + (A)(B)(C)	ARG	5
TERML	Load side of reactor name 5 characters + (A)(B)(C)	ARG	5
DCPLUS	Positive side of dc bus	ARG	6
DCMINU	Negative side of dc bus	ARG	6
CHOKEL	Choke inductance (mH)	NUM	6
SNUBBR	Snubber resistance (Ω)	NUM	6
SNUBBC	Snubber capacitance (μF)	NUM	6
STARTR	starting resistor (Ω)	NUM	6
RSHORTTIME	Shorting switch closing time (sec)	NUM	10
DCBUSC	dc bus capacitance (μF)	NUM	6
DCBUSR	dc bus resistance (Ω)	NUM	6
?	Output request (current)	NUM	1
@	Output request (voltage)	NUM	1
RECPOS RECNEG SHRTBK	Internal nodes for bridge connections	DUM	6
DIOD1A, DIOD1C DIOD2A, DIOD2C DIOD3A, DIOD3C DIOD4A, DIOD4C DIOD5A, DIOD5C DIOD6A, DIOD6C	Internal nodes for diode connections	DUM	6

Module 6PDIODE - .MOD File

```
C EMTP Data Module: 6PDIODE
C
C Description: Six Pulse Diode Bridge Rectifier (capacitor smoothing, resistive load)
C
C Created: 5/5/94 (TEG/LT)  Last Updated: 5/5/94 (TEG)
C
C Usage: 6PDIODE FRONT,  TRMNL,  DCPLUS, DCMINU,                          -; NODES
C                CHOKEL, SNUBBR, SNUBBC, STARTR, RSHORTIME,               -; PARA
                 DCBUSC, DCBUSR, ?, @                                      ; PARA
C
ARG                                                                  - ; ARGUMENTS
FRONT, TRMNL, DCPLUS, DCMNUS,                                        - ; NODES
CHOKEL, SNUBBR, SNUBBC, STARTR,RSHORTTIME,                           - ; AC PARAMETERS
DCBUSC, DCBUSR, ?, @                                                   ; OUTPUT REQ
C
NUM                                                                  - ; NUMERICAL
CHOKEL, SNUBBR, SNUBBC, STARTR,RSHORTTIME,DCBUSC,DCBUSR                ; PARAMETERS
C
DUM                                                                  - ; DUM
RECPOS, RECNEG, SHRTBK,                                              - ; DUM1
DIOD1C, DIOD2C, DIOD3C, DIOD4C, DIOD5C, DIOD6C,                      - ; DUM2
DIOD1A, DIOD2A, DIOD3A, DIOD4A, DIOD5A, DIOD6A                         ; DUM2
C
/BRANCH
C
C AC Choke Inductance
C
C <---Nodes--><---Refer--><-Ohms<---mH<---uF<--------------------------------Out
C Bus1->Bus2->Bus3->Bus4-><----R<----L<----C
  FRONTATRMNLA            1.0E-5CHOKEL                                      1
  FRONTBTRMNLB            1.0E-5CHOKEL                                      ?
  FRONTCTRMNLC            1.0E-5CHOKEL                                      ?
C .....^.....^.....^.....^.....^.....^.....^xxxxxxxxxxxxxxxxxxxxxxxxxxxxxxxxxx^
C
C Diode Snubber Circuits
C
C <---Nodes--><---Refer--><-Ohms<---mH<---uF<--------------------------------Out
C Bus1->Bus2->Bus3->Bus4-><----R<----L<----C
  TRMNLARECPOS            SNUBBR      SNUBBC
  TRMNLBRECPOS            SNUBBR      SNUBBC
  TRMNLCRECPOS            SNUBBR      SNUBBC
  TRMNLARECNEG            SNUBBR      SNUBBC
  TRMNLBRECNEG            SNUBBR      SNUBBC
  TRMNLCRECNEG            SNUBBR      SNUBBC
C .....^.....^.....^.....^.....^.....^.....^xxxxxxxxxxxxxxxxxxxxxxxxxxxxxxxxxx^
C
C <-------- Connection to positive and negative dc bus
C
C <---Nodes--><---Refer--><-Ohms<---mH<---uF<--------------------------------Out
C Bus1->Bus2->Bus3->Bus4-><----R<----L<----C
  DIOD1CRECPOS            1.0E-5
  DIOD3CRECPOS            1.0E-5
  DIOD5CRECPOS            1.0E-5
  RECNEGDIOD4A            1.0E-5
  RECNEGDIOD6A            1.0E-5
  RECNEGDIOD2A            1.0E-5
C .....^.....^.....^.....^.....^.....^.....^xxxxxxxxxxxxxxxxxxxxxxxxxxxxxxxxxx^
C
```

Module 6PDIODE - .MOD File Continued

```
C <-------- Connection to power system (diode front-end)
C
C <---Nodes--><---Refer--><-Ohms<---mH<---uF<--------------------------------Out
C Bus1->Bus2->Bus3->Bus4-><----R<----L<----C
  TRMNLADIOD1A            1.0E-5
  TRMNLBDIOD3A            1.0E-5
  TRMNLCDIOD5A            1.0E-5
  DIOD4CTRMNLA            1.0E-5
  DIOD6CTRMNLB            1.0E-5
  DIOD2CTRMNLC            1.0E-5
C .....^.....^.....^.....^.....^.....^.....^xxxxxxxxxxxxxxxxxxxxxxxxxxxxxxxxxx^
C
C <-------- Phase-to-Phase Voltage Sampling
C
C <---Nodes--><---Refer--><-Ohms<---mH<---uF<--------------------------------Out
C Bus1->Bus2->Bus3->Bus4-><----R<----L<----C
  TRMNLATRMNLB            1.0E08                                            2
  TRMNLBTRMNLC            1.0E08                                            @
  TRMNLCTRMNLA            1.0E08                                            @
C .....^.....^.....^.....^.....^.....^.....^xxxxxxxxxxxxxxxxxxxxxxxxxxxxxxxxxx^
C
C <-------- Starting Resistor
C
C <---Nodes--><---Refer--><-Ohms<---mH<---uF<--------------------------------Out
C Bus1->Bus2->Bus3->Bus4-><----R<----L<----C
  RECPOSSHRTBK            STARTR                                            ?
C .....^.....^.....^.....^.....^.....^.....^xxxxxxxxxxxxxxxxxxxxxxxxxxxxxxxxxx^
C
/SWITCH
C
C <-------- Starting Resistor Short Switch
C
C BUS-->BUS--><---TCLOSE<----TOPEN<-------IE<----FLASH<--REQUEST<-----TARGET<--O
  RECPOSSHRTBKRSHORTTIME     9999.                                          ?
C .....^.....^.........^.........^.........^.........^.........^.........^...^
C
/BRANCH
C
C <-------- dc Bus Components
C
C <---Nodes--><---Refer--><-Ohms<---mH<---uF<--------------------------------Out
C Bus1->Bus2->Bus3->Bus4-><----R<----L<----C
  SHRTBKDCPLUS            1.0E-5                                            ?
  DCMNUSDCPLUS            DCBUSR
  DCPLUSDCMNUS                         DCBUSC                               2
  RECPOS                               1.0000
  RECNEG                               1.0000
  RECNEGDCMNUS            1.0E-5
C .....^.....^.....^.....^.....^.....^.....^xxxxxxxxxxxxxxxxxxxxxxxxxxxxxxxxxx^
/SWITCH
C
C <-------- Diodes (front-end)
C BUS-->BUS--><------Vig<----Ihold<-------td<---------CLOSEDSame<Grid<Op/Cl<xxOO
11DIOD1ADIOD1C                 0.1                                          ?
11DIOD3ADIOD3C                 0.1                                          ?
11DIOD5ADIOD5C                 0.1                                          ?
11DIOD4ADIOD4C                 0.1                                          ?
11DIOD6ADIOD6C                 0.1                                          ?
11DIOD2ADIOD2C                 0.1                                          ?
C .....^.....^.........^.........^.........^.........^.........^.........^...^
/ENDMODULE
$EOF
```

Module 6PDIODE - .INC File

```
KARD     1    1    1    1    3    3    3    4    4    4    4    5    5    5    5
         6    6    6    6    7    7    7    7    8    8    8    8    9    9    9
         9   10   10   10   10   11   11   11   11   12   12   13   13   14   14
        15   15   16   16   17   17   18   18   19   19   20   20   21   21   22
        22   23   23   24   24   25   25   25   26   26   26   27   27   27   27
        29   29   29   29   31   31   31   32   32   32   33   33   33   34   35
        36   36   38   38   38   39   39   39   40   40   40   41   41   41   42
        42   42   43   43   43
KARG    10   11   12   13    1    2    5    1    2    5   12    1    2    5   12
         2    6    7  -15    2    6    7  -15    2    6    7  -15    2    6    7
       -14    2    6    7  -14    2    6    7  -14  -15  -12  -15  -10  -15   -8
       -14   -3  -14   -1  -14   -5    2   -6    2   -4    2   -2    2   -9    2
        -7    2  -11    2    2    2    2   13    2    2   13    8   12  -15  -13
         9   12  -15  -13    3   12  -13    3    4   11    3    4   10  -15  -14
         4  -14   12  -12   -6   12  -10   -4   12   -8   -2   12   -9   -3   12
        -7   -1   12  -11   -5
KBEG    18   26   34   37    3    9   33    3    9   33   80    3    9   33   80
         3   27   39    9    3   27   39    9    3   27   39    9    3   27   39
         9    3   27   39    9    3   27   39    9    9    3    9    3    9    3
         3    9    3    9    3    9    3    9    3    9    3    9    9    3    9
         3    9    3    3    9    3    9   80    3    9   80   27   80    3    9
        15   80    3    9    9   80    3    9    3   27    3    9   39    3    3
         9    3   80    9    3   80    9    3   80    9    3   80    9    3   80
         9    3   80    9    3
KEND    23   31   34   37    7   13   38    7   13   38   80    7   13   38   80
         7   32   44   14    7   32   44   14    7   32   44   14    7   32   44
        14    7   32   44   14    7   32   44   14   14    8   14    8   14    8
         8   14    8   14    8   14    7   14    7   14    7   14   13    8   13
         8   13    8    7   13    7   13   80    7   13   80   32   80    8   14
        24   80    8   14   14   80    8   14    8   32    8   14   44    8    8
        14    8   80   14    8   80   14    8   80   14    8   80   14    8   80
        14    8   80   14    8
KTEX     0    0    1    1    1    1    0    1    1    0    1    1    1    0    1
         1    0    0    1    1    0    0    1    1    0    0    1    1    0    0
         1    1    0    0    1    1    0    0    1    1    1    1    1    1    1
         1    1    1    1    1    1    1    1    1    1    1    1    1    1    1
         1    1    1    1    1    1    1    1    1    1    1    0    1    1    1
         0    1    1    1    1    1    1    1    1    0    1    1    0    1    1
         1    1    1    1    1    1    1    1    1    1    1    1    1    1    1
         1    1    1    1    1
C EMTP Data Module: 6PDIODE
C
C Description: Six Pulse Diode Bridge (front-end only)
C
C Created: 5/5/94 (TEG/LT)  Last Updated: 5/5/94 (TEG)
C
C Usage: 6PDIODE FRONT,  TRMNL,  DCPLUS, DCMINU,                          -; N
C                CHOKEL, SNUBBR, SNUBBC, STARTR, RSHORTIME,               -; P
                 DCBUSC, DCBUSR, ?, @                                      ; P
C
C
C
/BRANCH
C
C AC Choke Inductance
C
C <---Nodes--><---Refer--><-Ohms<---mH<---uF<--------------------------------Out
C Bus1->Bus2->Bus3->Bus4-><----R<----L<----C
  FRONTATRMNLA            1.0E-5CHOKEL                                        1
  FRONTBTRMNLB            1.0E-5CHOKEL                                        ?
  FRONTCTRMNLC            1.0E-5CHOKEL                                        ?
C .....^.....^.....^.....^.....^.....^.....^xxxxxxxxxxxxxxxxxxxxxxxxxxxxxxxxxx^
```

Module 6PDIODE - .INC File Continued

```
C Diode Snubber Circuits
C
C <---Nodes--><---Refer--><-Ohms<---mH<---uF<--------------------------------Out
C Bus1->Bus2->Bus3->Bus4-><----R<----L<----C
  TRMNLARECPOS            SNUBBR      SNUBBC
  TRMNLBRECPOS            SNUBBR      SNUBBC
  TRMNLCRECPOS            SNUBBR      SNUBBC
  TRMNLARECNEG            SNUBBR      SNUBBC
  TRMNLBRECNEG            SNUBBR      SNUBBC
  TRMNLCRECNEG            SNUBBR      SNUBBC
C .....^.....^.....^.....^.....^.....^.....^xxxxxxxxxxxxxxxxxxxxxxxxxxxxxxxxxx^
C
C <-------- Connection to positive and negative dc bus
C
C <---Nodes--><---Refer--><-Ohms<---mH<---uF<--------------------------------Out
C Bus1->Bus2->Bus3->Bus4-><----R<----L<----C
  DIOD1CRECPOS            1.0E-5
  DIOD3CRECPOS            1.0E-5
  DIOD5CRECPOS            1.0E-5
  RECNEGDIOD4A            1.0E-5
  RECNEGDIOD6A            1.0E-5
  RECNEGDIOD2A            1.0E-5
C .....^.....^.....^.....^.....^.....^.....^xxxxxxxxxxxxxxxxxxxxxxxxxxxxxxxxxx^
C
C <-------- Connection to power system (diode front-end)
C
C <---Nodes--><---Refer--><-Ohms<---mH<---uF<--------------------------------Out
C Bus1->Bus2->Bus3->Bus4-><----R<----L<----C
  TRMNLADIOD1A            1.0E-5
  TRMNLBDIOD3A            1.0E-5
  TRMNLCDIOD5A            1.0E-5
  DIOD4CTRMNLA            1.0E-5
  DIOD6CTRMNLB            1.0E-5
  DIOD2CTRMNLC            1.0E-5
C .....^.....^.....^.....^.....^.....^.....^xxxxxxxxxxxxxxxxxxxxxxxxxxxxxxxxxx^
C
C <-------- Phase-to-Phase Voltage Sampling
C
C <---Nodes--><---Refer--><-Ohms<---mH<---uF<--------------------------------Out
C Bus1->Bus2->Bus3->Bus4-><----R<----L<----C
  TRMNLATRMNLB            1.0E08                                            2
  TRMNLBTRMNLC            1.0E08                                            @
  TRMNLCTRMNLA            1.0E08                                            @
C .....^.....^.....^.....^.....^.....^.....^xxxxxxxxxxxxxxxxxxxxxxxxxxxxxxxxxx^
C
C <-------- Starting Resistor
C
C <---Nodes--><---Refer--><-Ohms<---mH<---uF<--------------------------------Out
C Bus1->Bus2->Bus3->Bus4-><----R<----L<----C
  RECPOSSHRTBK            STARTR                                            ?
C .....^.....^.....^.....^.....^.....^.....^xxxxxxxxxxxxxxxxxxxxxxxxxxxxxxxxxx^
C
/SWITCH
C
C <-------- Starting Resistor Short Switch
C
C BUS-->BUS--><---TCLOSE<----TOPEN<-------IE<----FLASH<--REQUEST<-----TARGET<--O
  RECPOSSHRTBKRSHORTTIME     9999.                                          ?
C .....^.....^.........^.........^.........^.........^.........^..........^...^
C
/BRANCH
C
C
C
```

Module 6PDIODE - .INC File Continued

```
C
C <-------- dc Bus Components
C
C <---Nodes--><---Refer--><-Ohms<---mH<---uF<--------------------------------Out
C Bus1->Bus2->Bus3->Bus4-><----R<----L<----C
  SHRTBKDCPLUS            1.0E-5                                            ?
  DCMNUSDCPLUS            DCBUSR
  DCPLUSDCMNUS                         DCBUSC                               2
  RECPOS                               1.0000
  RECNEG                               1.0000
  RECNEGDCMNUS            1.0E-5
C .....^.....^.....^.....^.....^.....^.....^xxxxxxxxxxxxxxxxxxxxxxxxxxxxxxxxxx^
C
/SWITCH
C
C <-------- Diodes (front-end)
C BUS-->BUS--><------Vig<----Ihold<-------td<---------CLOSEDSame<Grid<Op/Cl<xxOO
11DIOD1ADIOD1C                 0.1                                          ?
11DIOD3ADIOD3C                 0.1                                          ?
11DIOD5ADIOD5C                 0.1                                          ?
11DIOD4ADIOD4C                 0.1                                          ?
11DIOD6ADIOD6C                 0.1                                          ?
11DIOD2ADIOD2C                 0.1                                          ?
C .....^.....^.........^.........^.........^.........^.........^...........^...^
/ENDMODULE
$EOF **** END OF FILE ****
DATE AND TIME OF MODULE CONVERSION:    05/04/94  11.58.18
NUMBER OF ARGUMENTS DECLARED IN THIS MODULE:    13
NUMBER OF DUMMY VARIABLES DECLARED IN THIS MODULE:    15
                      **USER-SUPPLIED HEADER CARDS FOLLOW**
ARG                                                          - ; ARGUMENTS
FRONT, TRMNL, DCPLUS, DCMNUS,                                - ; NODES
CHOKEL, SNUBBR, SNUBBC, STARTR,RSHORTTIME,                   - ; AC PARAME
DCBUSC, DCBUSR, ?, @                                           ; OUTPUT RE
NUM                                                          - ; NUMERICAL
CHOKEL, SNUBBR, SNUBBC, STARTR,RSHORTTIME,DCBUSC,DCBUSR        ; PARAMETER
DUM                                                          - ; DUM
RECPOS, RECNEG, SHRTBK,                                      - ; DUM1
DIOD1C, DIOD2C, DIOD3C, DIOD4C, DIOD5C, DIOD6C,              - ; DUM2
DIOD1A, DIOD2A, DIOD3A, DIOD4A, DIOD5A, DIOD6A                 ; DUM2
IOD4A, DIOD5A, DIOD6A                       ; DUM2
```

System Example #1

- System example illustrating usage of modules 3PHEQUIV and 6PDIODE:

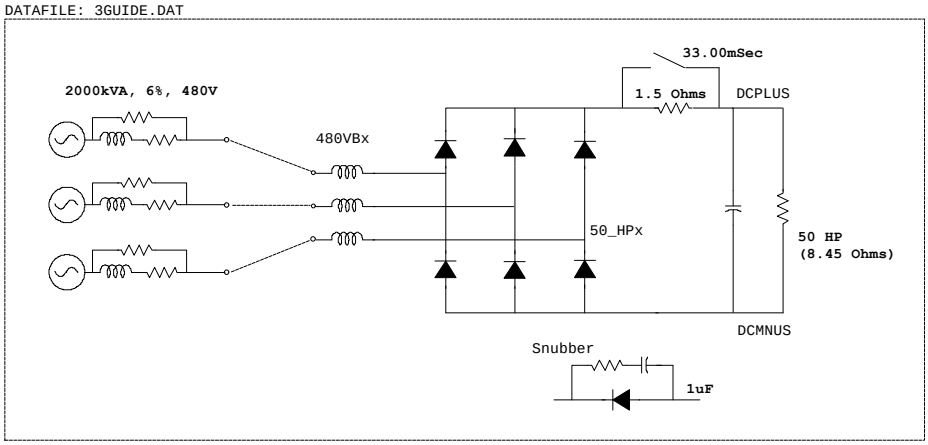

Module 3PHEQUIV - Argument List

Argument	Description	Type	Length	Value
TERML	Output terminal name 5 characters + (A)(B)(C)	ARG	5	480VB
ZERORE	Zero sequence source resistance (Ω)	NUM	6	0.001
ZEROINDUCTAN	Zero sequence source inductance (mH)	NUM	12	0.018
POSIRE	Positive sequence source resistance (Ω)	NUM	6	0.001
POSIINDUCTAN	Positive sequence source inductance (mH)	NUM	12	0.018
AMPLITUDES	Voltage source (peak voltage, phase-to-ground)	NUM	10	391.92
TSTARTTIME	Start time (sec), -1.0 for steady-state	NUM	10	-1.0
TSTOPTIMES	Stop time (sec), 9999. for entire simulation	NUM	10	9999.9
RDAMP1	Parallel damping resistor (Ω)	NUM	6	10
COM	Comment	N/A	N/A	None
INTERA(B)(C)	Internal nodes for voltage source connection	DUM	6	N/A

Module 6PDIODE - Argument List

Argument	Description	Type	Length	Value
FRONT	Input terminal name 5 characters + (A)(B)(C)	ARG	5	480VB
TERML	Load side of reactor name 5 characters + (A)(B)(C)	ARG	5	50_HP
DCPLUS	Positive side of dc bus	ARG	6	DCPLUS
DCMINU	Negative side of dc bus	ARG	6	DCMNUS
CHOKEL	Choke inductance (mH)	NUM	6	0.3667
SNUBBR	Snubber resistance (Ω)	NUM	6	100.0
SNUBBC	Snubber capacitance (μF)	NUM	6	1.0
STARTR	Starting resistor (Ω)	NUM	6	1.500
RSHORTTIME	Shorting switch closing time (sec)	NUM	10	33.00E-03
DCBUSC	dc bus capacitance (μF)	NUM	6	1000
DCBUSR	dc bus resistance (Ω)	NUM	6	8.45
?	Output request (current)	NUM	1	0
@	Output request (voltage)	NUM	1	0
RECPOS RECNEG SHRTBK	Internal nodes for bridge connections	DUM	6	N/A
DIOD1A, DIOD1C DIOD2A, DIOD2C DIOD3A, DIOD3C DIOD4A, DIOD4C DIOD5A, DIOD5C DIOD6A, DIOD6C	Internal nodes for diode connections	DUM	6	N/A

Data Case - GUIDE.DAT

```
C  ##################################################################
C
C        Title:  Three-Phase Six-Pulse Diode Bridge
C                (Using Module Files)
C
C           By:  Thomas Grebe - Electrotek Concepts, Inc.
C         Date:  May, 1994
C
C         Case:  Example for EMTP Data Module Guide
C
C   Conditions:  2000 KVA, 6%, 480 V Source
C                50 HP Drive, 3% Choke
C
C      Remarks:
C
C  ##################################################################
C
BEGIN NEW DATA CASE
$PREFIX, C:\DOC\MODULE\INCFILE\
$SUFFIX, .INC
C
C <-------------------------------------------------Misc Data------------------
C
C ----Dt<---Tmax<---Xopt<---Copt
  50E-06 100.E-3
C .....^.......^.......^.......^
C -Iprnt<--Iplot<-Idoubl<-Kssout<-Maxout<---Ipun<-Memsav<---Icat<-Nenerg
    5001       3       1       1       1       0       0       2       0
C .....^.......^.......^.......^.......^.......^.......^.......^.......^
C
C <-------------------------------------------------Circuit Data---------------
C Source Equivalent
C 2000 kVA, 6% Transformer, 480 V secondary (assume positive and zero seq equal)
C
C Usage: 3PHEQUIV TERML, R0, L0, R1, L1, VPEAK, -
C                TSTART, TSTOP, RDAMP1 ; COM
C
$INCLUDE 3PHEQUIV 480VB, 0.001, 0.018, 0.001, 0.018, 391.92, -
                   -1.0, 9999.9, 10.0
C
C Six-Pulse Diode Bridge
C 50 HP, 3% Choke, Snubber = 100 Ohms & 1.0uF
C
C Usage: 6PDIODE FRONT,  TRMNL,  DCPLUS, DCMINU,                          -; NODES
C                CHOKEL, SNUBBR, SNUBBC, STARTR, RSHORTIME,               -; PARA
C                DCBUSC, DCBUSR, ?, @                                     -; PARA
C
$INCLUDE 6PDIODE  480VB, 50_HP, DCPLUS, DCMNUS, -
                  0.3667, 100.0, 1.0, 1.500, 33.00E-3, -
                  5000.0, 8.45, 0, 0
C
C <-------------------------------------------------Nodal Output---------------
/OUTPUT
C BUS-->BUS-->BUS-->
  480VBA480VBB480VBC
C .....^.....^.....^
BLANK ENDS BRANCH
BLANK ENDS SWITCH
BLANK ENDS SOURCE
BLANK ENDS OUTPUT
BLANK ENDS PLOT
BLANK ENDS CASE
```

Network Connectivity - GUIDE.DAT

```
FROM BUS NAME 1 NAMES OF ALL ADJACENT BUSSES
 --------------+-------------------------------------------------------------
        480VBA1DUM003*DUM003*50 HPA*
        DUM0031480VBA*480VBA*
        480VBB1DUM002*DUM002*50 HPB*
        DUM0021480VBB*480VBB*
        480VBC1DUM001*DUM001*50 HPC*
        DUM0011480VBC*480VBC*
        50 HPA1480VBA*50 HPB*50 HPC*DUM018*DUM017*DUM009*DUM012*
        50 HPB1480VBB*50 HPA*50 HPC*DUM018*DUM017*DUM007*DUM010*
        50 HPC1480VBC*50 HPA*50 HPB*DUM018*DUM017*DUM005*DUM014*
        DUM0181TERRA *50 HPA*50 HPB*50 HPC*DUM015*DUM013*DUM011*DUM016*DUM016*
        DUM0171TERRA *50 HPA*50 HPB*50 HPC*DUM006*DUM004*DUM008*DCMNUS*
        DUM0151DUM018*DUM009*
        DUM0131DUM018*DUM007*
        DUM0111DUM018*DUM005*
        DUM0061DUM017*DUM012*
        DUM0041DUM017*DUM010*
        DUM0081DUM017*DUM014*
        DUM009150 HPA*DUM015*
        DUM007150 HPB*DUM013*
        DUM005150 HPC*DUM011*
        DUM012150 HPA*DUM006*
        DUM010150 HPB*DUM004*
        DUM014150 HPC*DUM008*
        DUM0161DUM018*DUM018*DCPLUS*
        DCPLUS1DUM016*DCMNUS*DCMNUS*
        DCMNUS1DUM017*DCPLUS*DCPLUS*
        TERRA 1DUM018*DUM017*
 --------------+-------------------------------------------------------------
```

Sample Resutls for Case GUIDE.DAT

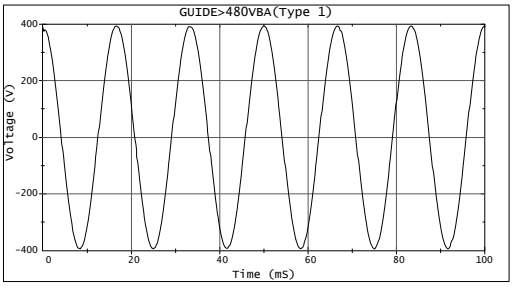

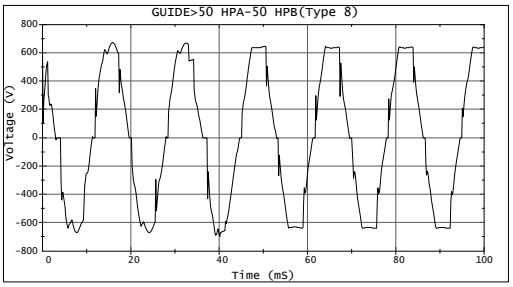

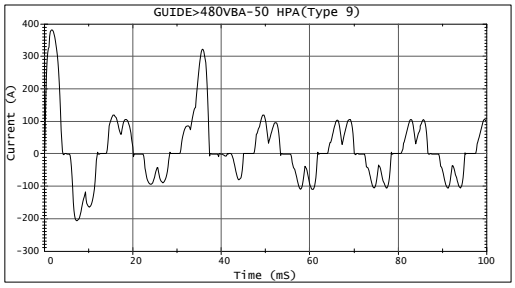

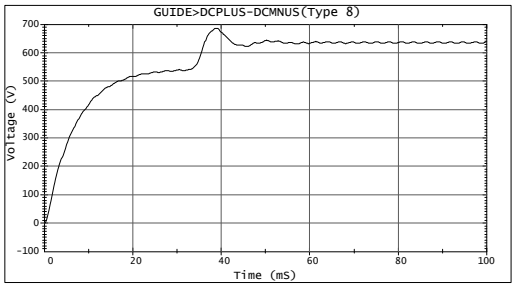

Power System Analysis Using the Electromagnetic Transients Program

EMTP

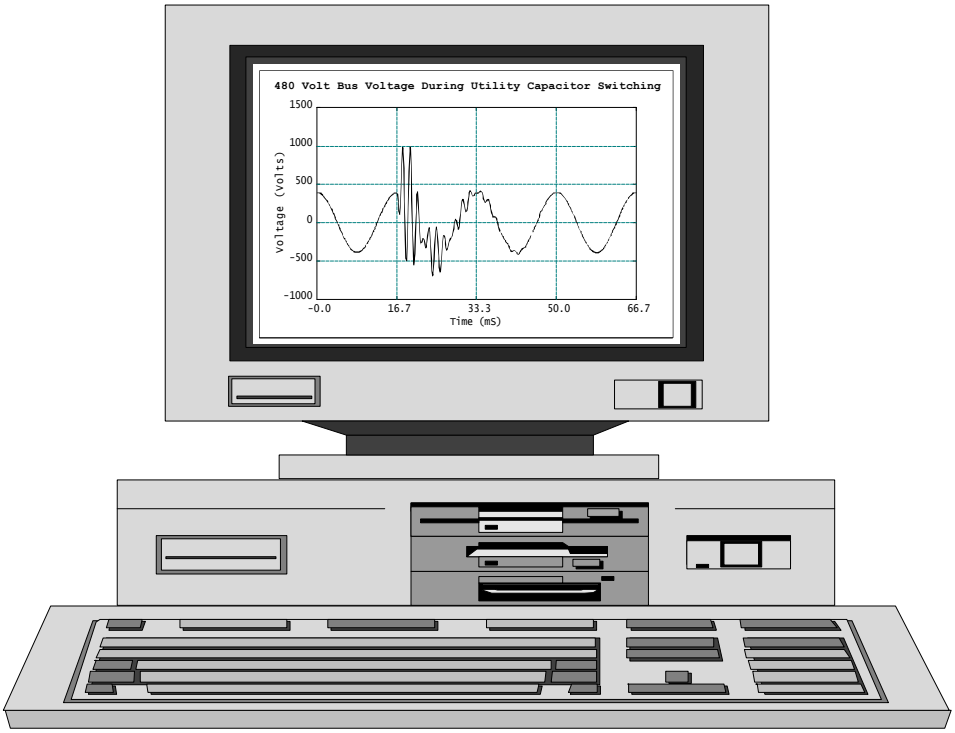

EMTP Case Study Workbook

Volume 3 - Transmission and Distribution

April 2000

Table of Contents:

System Modeling for Lightning Surge Simulations	6
Capacitor Energizing Transients	17
The Restrike Transient	29
Magnification at Lower Voltage Capacitors	41
Frequency Scans	50
Transients at Transformer Terminations	52
Distribution System Modeling	74
Transformer Energizing Case Study	166
Transmission Line Energizing Case Study	174
Ferroresonance Case Study	179
Current Limiting Fuse Case Study	183

List of Related EMTP Data Files:

Normal Capacitor Energizing	CAPENER.DAT
Capacitor Switching / Breaker Restrike	RESTRIKE.DAT
Capacitor Switching / Voltage Magnification	CAP_MAG.DAT
Voltage Magnification - 3 Phase	CAPMAG_3.DAT
Frequency Scan Example (CAP_MAG)	FREQSCAN.DAT
Capacitor Switching / Nuisance Tripping	ASDTRIP.DAT
Capacitor Switching / Statistical Setup	STATCASE.DAT
Phase-to-Phase Transients	PH_TO_PH.DAT
Transformer Energizing Case Study	TXINRUSH.DAT
Transmission Line Energizing Case Study	ENERLINE.DAT
Ferroresonance Case Study	FERRORES.DAT

T&D Dominant Transient Frequencies

- High frequency events:
  - Lightning
  - Short cable / line operation
  -
- Median frequency events:
  - Capacitor bank switching
  - Linear resonance (harmonics)
  - Solid-state equipment operation
  -
- Low frequency events:
  - Voltage sags
  - Motor / system interaction
  - Ferroresonance

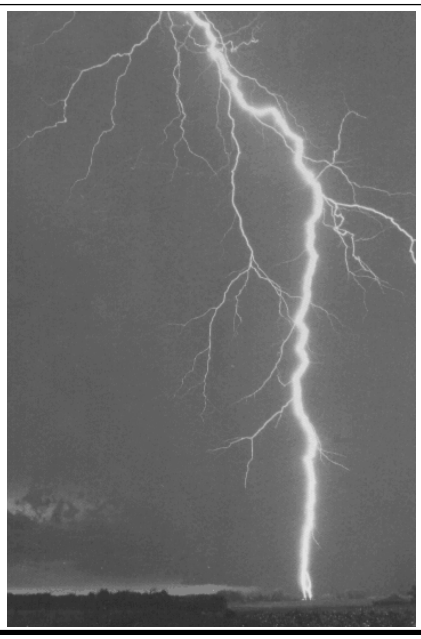

Transmission and Distribution *Volume 3, Slide 3*

Frequency range for power system transients:

Origin	Frequency Range (Typical)
Transformer energization & ferroresonance	(DC) 0.1 Hz - 1 kHz
Load rejection	0.1 Hz - 3 kHz
Capacitor switching	50/60 Hz - 3 kHz
Fault clearing	50/60 Hz - 3 kHz
Fault initiation	50/60 Hz - 20 kHz
Line energization	50/60 Hz - 20 kHz
Line reclosing	(DC) 50/60 Hz - 20 kHz
Transient recovery voltage	50/60 Hz - 100 kHz
Breaker restrikes	10 kHz - 1 MHz
Lightning surges	10 kHz - 3 MHz

Primary Causes of Systems Transients

- Lightning
- Switching Operations

Transmission and Distribution *Volume 3, Slide 4*

The study of electrical transient phenomena involves a frequency range from DC to about 10 MHz. Typically, electromagnetic phenomena involves frequencies above the power frequency, and electromechanical phenomena involves frequencies below the power frequency.

Transient phenomena appear as transitions from one steady-state condition to another. The primary causes of these transitions are switching operations and lightning.

Lightning Surges

- Induced Surges
- Shielding Failure Surges
- Back Flashover Surges

Transmission and Distribution *Volume 3, Slide 5*

Lightning overvoltages in power systems are either caused by a lightning stroke to the line conductors, the tower structure and the ground wires, or they can also be created by an induction process from a nearby stroke either to ground or to another circuit located in close proximity. These events may result in system faults from either forward or back flashovers, and thereby could potentially damage terminal equipment. The effects produced by those events which do not cause flashovers can also be severe. There have been many interesting shielding failure events captured, which created moderate overvoltages [1]. These overvoltages, with non-standard waveshapes, are fully seen by the system equipment at the substations. The resulting effects of these non-standard waveforms impinging across the substation transformers, for example, are not yet well known. Many unexplained EHV transformer failures occurred in some utility systems may partially have been caused by these effects. It is therefore important to realistically simulate and fully understand all possible lightning disturbances.

System Modeling for Lightning Surge Simulations

- Sources
- Transmission Line
- Towers and Tower Footing Impedance
- Surge Arresters and Insulators
- Substation Buswork, Cables and Equipment
- Corona

Transmission and Distribution *Volume 3, Slide 6*

Due to the lack of field data verifications, corona is often ignored in lightning simulations. Since corona reduces the surge wavefront, ignoring it may provide an additional safety margin in insulation coordination studies.

Sources

- Lightning stroke representation
  - Triangular Ramp Function, Type 13
  - Concave Wavefront Function Suggested by CIGRE
- Power Frequency Sources
  - AC 60 Hz system nominal voltages are included as initial conditions

Transmission and Distribution *Volume 3, Slide 7*

When lighting strikes a power line, it in effect injects a current source into the power system. The injected current representing the lightning return-stroke is generally modelled as a current source in parallel with the stroke channel impedance (~ 400 Ω). A single lightning flash may contain several strokes, with the average being three. If each stroke has a certain waveshape and magnitude, it may be necessary to represent the flash as a series of current sources in simulations. In most cases, however, a single current source is justified. Most studies assumed the return-stroke current as a triangular-ramp function, because of the need for simplicity in the analyses involved. IEEE recommendations for surge arrester studies still use such simple waveforms. The most recent lightning waveform, proposed by the CIGRE Working Group 33 [2], gives a somewhat more realistic picture, since it has the concave wavefront, similar to that observed in measurements. It is therefore recommended that this new waveform be used in digital simulations. The latest EMTP version MicroTran has this function implemented.

Transmission Line Models

- Constant-parameter (CP) Distributed model
- Frequency-dependent (FD) Distributed model
- Full phase-domain frequency-dependent (PFD) Distributed model

Transmission and Distribution *Volume 3, Slide 8*

If the CP line model is used for lightning studies, the line should usually be modelled as untransposed, and the transformation matrix for transforming phase to mode quantities should be evaluated in the hundred of kHz range. Unfortunately, the option of lumping R in a few places, which is used in many studies to take the line losses into account, is not usable for long lines in lightning studies, since the total line series resistance at high frequencies is no longer much less than the line surge impedance. This is one of the restrictions that CP line model has. For this reason it is wise to use the FD line model. However, even this model has the limitation of using constant transformation matrices for conversion between phase and modal quantities. This assumption is valid for single and flat circuit lines. It is less accurate for double-circuit lines and probable worse for triple circuit lines. In general, the constant transformation matrix assumption is questionable if the assymetry of the line configuration is strong. Thus the PFD line model is desired [3]. This line model provides correct answers for a wide frequency range [1 Hz - 1 MHz] and is suitable for most types of studies.

Towers and Tower Footing Impedance

- Towers
  - Uniform transmission line model
  - Cascaded model where the tower is divided into many sections of uniform line model
  - Nonuniform transmission line model
- Tower Footing Impedance
  - Constant resistance
  - Frequency-dependent model

Transmission and Distribution *Volume 3, Slide 9*

In lightning surge simulations, the tower structure has typically been modelled as a lossless transmission line having a uniform surge impedance, even though the accuracy of such representation has not always been verified. According to studies and measurements in the past few decades, the tower surge impedance is actually position-dependent. It varies as the surge travels through the tower body. Thus, the tower is sometimes represented using a cascaded model, where it is devided into many sections of uniform transmission lines, having different surge impedance values. Recent research has shown that the tower is most accurate when being represented as a hybrid model. This hybrid model is a combination of uniform and nonuniform transmission line models [4].

Arresters and Insulators

- Arresters
  - Use an iterative nonlinear resistor (i.e.., type 92)
  - Avoid using pseudo nonlinear resistor
- Insulators
  - Voltage-dependent ideal switches in parallel with insulator capacitances
  - voltage-dependent switches with built-in flashover volt-time curves, in parallel with insulator capacitances
  - Typical capacitance values for suspension insulators are in the range of some 10 pF/unit, and for pin insulators are around 100 pF/unit

Transmission and Distribution *Volume 3, Slide 10*

Substation Buswork, Cables and Equipment

- Substation buswork
  - Untransposed distributed parameter line model for length > 3 m
  - Lump parameter inductance of 1.0 μH/m for the rest
- Cables
  - Distributed line model with surge impedance of 30 - 60 Ω and the propagation velocity of 1/3 to 1/2 speed of light
- Substation equipment
  - Stray capacitances to ground

Induced Surges

- The coupling effects between transmission lines need to be represented accurately. The lines should be modeled as untransposed.
- Ovevoltages occur in distribution lines located directly underneath transmission lines could be significant.
- Towers and their footing impedances are not important.

Transmission and Distribution *Volume 3, Slide 12*

This event is created when the lightning flash incidents either to the ground or to another circuit located in close proximity. The former is difficult to simualte because it is not easy to electrically model the grounding system. For the latter, the nearby circuit and the circuit under examination should be modelled as one complete transmission line which includes all of the conductors.

Shielding Failure Surges

- Complete transmission line between substations must be represented. The lines can be modeled as ballanced or untransposed.
- Towers and their footing impedances are not important.
- Substation transformers must be modeled in detail to study the effects of surges transferring from high to low voltage sides. Significant phase-to-phase overvoltages could arise on the low voltage side.
- Need to study these types of events in detail for the protection of low-side surges.

Transmission and Distribution *Volume 3, Slide 13*

This event occurs when the lightning flash passes through the protective zone of the ground wires and terminates on the phase conductor. For distribution lines, a flashover is almost always resulted from this type of event, whereas for transmission line systems, the overvoltage level might not surpass the line insulation BIL, thus healthy surges (up to 2.0 p.u.) will travel along the line and impinge across the transformer terminals at the substation, thereby resulting in moderate surges entering into lower-voltage systems.

Back Flashover Surges

- Transmission towers and footing impedances are very important. Need to represent them as accurate as possible.
- Capacitances of the line insulators and from the phase conductors to the tower body need be represented.
- Transmission lines can be modeled as untransposed or balanced.
- Since lightning surges are attenuated fast on ground wires, only a few spans from the substation need be represented (typically 7 - 10 spans)

Transmission and Distribution *Volume 3, Slide 14*

This event occurs when the lightning flash teminates on either the tower or the ground wire, followed by a flashover to the phase conductors. This type of flashover is called back flashover.

Switching Surges

- Capacitor Energization
- Transient Recovery Voltage (Prestrike and Restrike)
- Transformer and Shunt Reactor Energization (Temporary Overvoltages and Inrush Currents)
- Switching off Transformers and Shunt Reactors (Ferroresonance)
- Transmission Line/Underground Cable Energization
- Load Rejection
- Fault Initiation and Fault Clearing
- etc.

Transmission and Distribution *Volume 3, Slide 15*

Capacitor Standards

- IEEE Standard 1036-1992 - Guide for Application
- ANSI/IEEE Standard 18-1992 - Shunt Power Capacitors
- ANSI/IEEE C37.99-1990 - Guide for Protection
- ANSI/IEEE C37.012-1979 - Guide for Capacitor Switching Breakers
- IEEE Standard 519-1992 - Harmonic Control
- New IEEE Working Group - Harmonic Filters

Transmission and Distribution *Volume 3, Slide 16*

Capacitor Energizing Transients

- The Basic LC Circuit
- Damping
  - Load
  - System Impedances
- Grounded vs Ungrounded

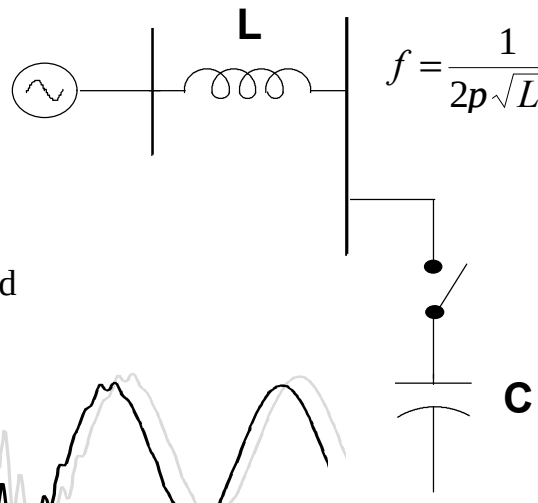

$$f = \frac{1}{2p\sqrt{LC}}$$

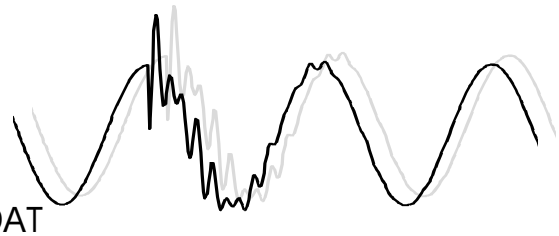

CAPENER.DAT

Transmission and Distribution *Volume 3, Slide 17*

The analysis of high voltage capacitor switching concerns in the utility environment consists primarily of measurements and computer simulations.

For a shunt capacitor bank on a substation high voltage bus, transmission line capacitance and other capacitor banks cause the energizing transient to have more than one natural frequency. However, for the first order approximation, the equation above can still be used to determine the dominant frequency.

The energizing transient is important because it is one of the most frequent system switching operations. It can produce high phase-to-phase overvoltages on a terminating transformer, excite circuit resonances resulting in transient voltage magnification in the secondary voltage networks, or cause problems with sensitive electronic equipment in customer facilities.

Capacitor Energizing - Snapshot

- Example distribution system capacitor energizing transient voltage waveform:

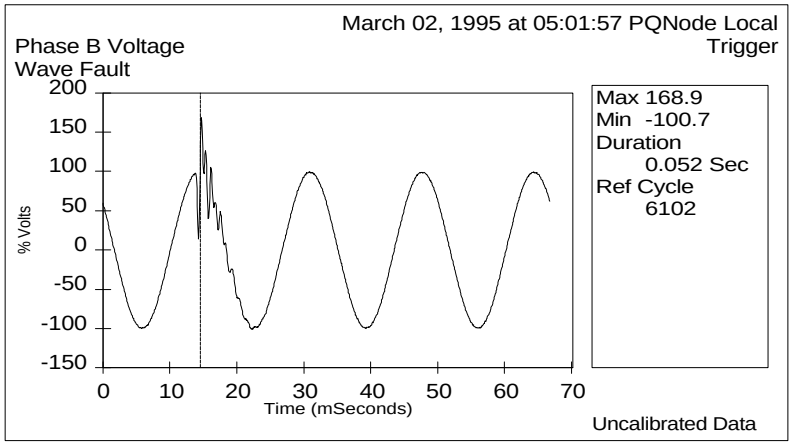

For a practical capacitor bank energization without trapped charge, system losses, loads, and transmission system capacitance cause the transient magnitude to be much less than the theoretical 2.0 pu. Typical levels range from 1.2 to 1.7 pu.

Transient frequencies due to utility capacitor switching usually fall in the range 300-1000 Hz. Transient overvoltages which result are usually not of concern to the utility, since peak magnitudes are just below the level of which utility surge protection, such as arresters, begins to operate. Because of the relatively low frequency, these transients will pass through step-down transformers to customer loads. Secondary overvoltages can cause voltage magnification or nuisance tripping of adjustable-speed drives.

Voltage Transient - Magnitude

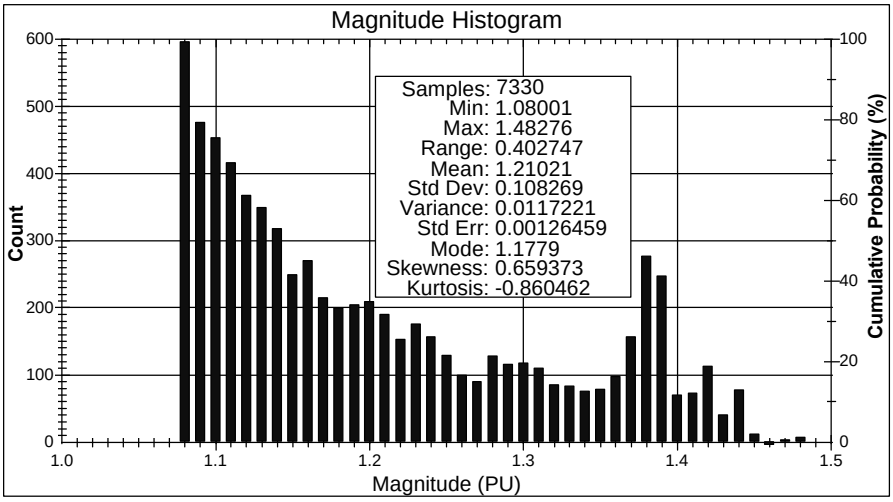

Transmission and Distribution *Volume 3, Slide 19*

Voltage Transient - Time of Occurrence

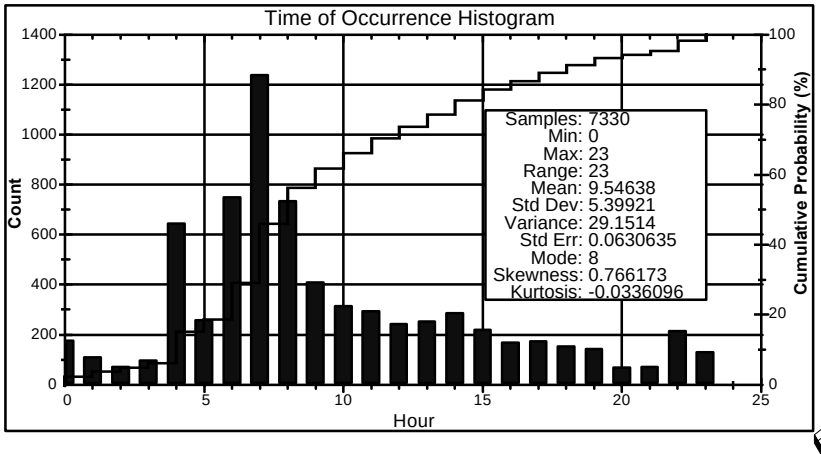

Voltage Transient - Frequency

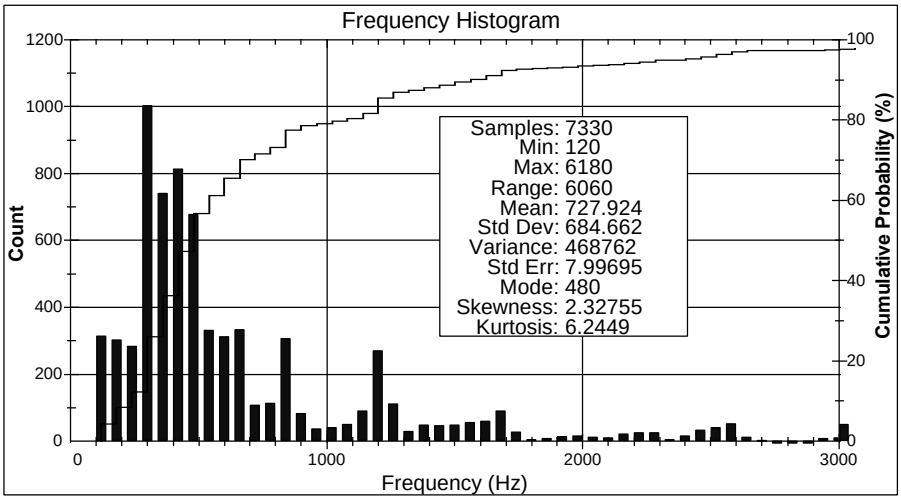

Voltage Transient - Duration

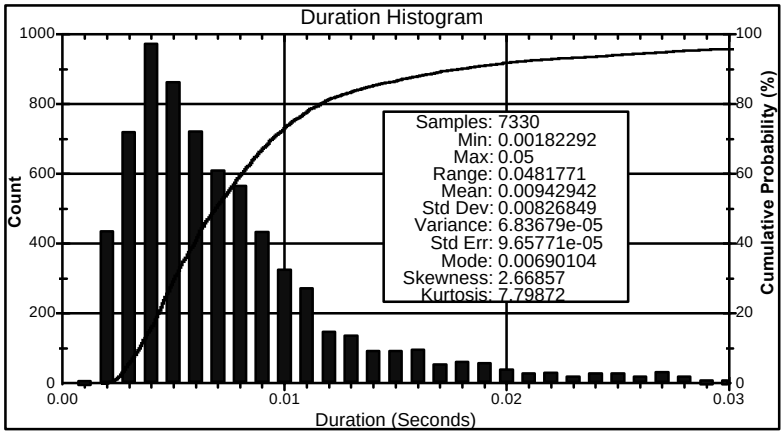

Overvoltage Control Methods

- Uncontrolled
  - No preventative means applied (always simulation basecase for comparison of effectiveness of other methods).
- Synchronous closing control
  - Method for controlling overvoltage by switching when the voltage across the switch at the closing instant is equal to zero (zero voltage on capacitor - zero voltage on bus).
- Preinsertion device
  - Method for controlling overvoltage by inserting an impedance (usually inductance or resistance in series with the component to be energized voltage.
- Arresters
  - Method for controlling overvoltage by "clipping" at a specified protective level.

Transmission and Distribution *Volume 3, Slide 21*

Switching device: The energizing transient can be controlled by using pre-insertion devices such as pre-insertion resistors or pre-insertion reactors. It can also be controlled by applying phase angle control techniques, known as synchronous closing. A typical connection time of a preinsertion device is one-half of a power frequency cycle. The optimum resistance value for controlling capacitor energization transients is approximately equal to the characteristic impedance of the charging loop. This usually demands high energy duty resistors resulting in a significant increase in cost.

Synchronous Closing Control

- Several manufacturers now have synchronous closing available at T&D voltage levels.
- Methods include analog and microprocessor controls.
- Can be used in combination with preinsertion device for added protection.
- Does not provide protection during restrike.
- May be a cost effective method when considering overvoltages at lower voltages (including customers).
- Power electronics (switches) will make concept very successful as switch voltage ratings increase.

Transmission and Distribution *Volume 3, Slide 22*

Synchronous Closing Control: Synchronous closing is independent contact closing of each phase near a voltage zero, as illustrated above.

To accomplish closing at or near a voltage zero (avoiding high prestrike voltages), it is necessary to apply a switching device that maintains a dielectric strength sufficient to withstand system voltages until its contacts touch. Although this level of precision is difficult to achieve, closing consistency of ±0.5 milliseconds should be possible. Previous studies have indicated that a closing consistency of ±1.0 millisecond provides overvoltage control comparable to properly sized pre-insertion resistors. The success of a synchronous closing scheme is often determined by the ability to repeat the process under various (system and climate) conditions.

Synchronous Closing - Timing

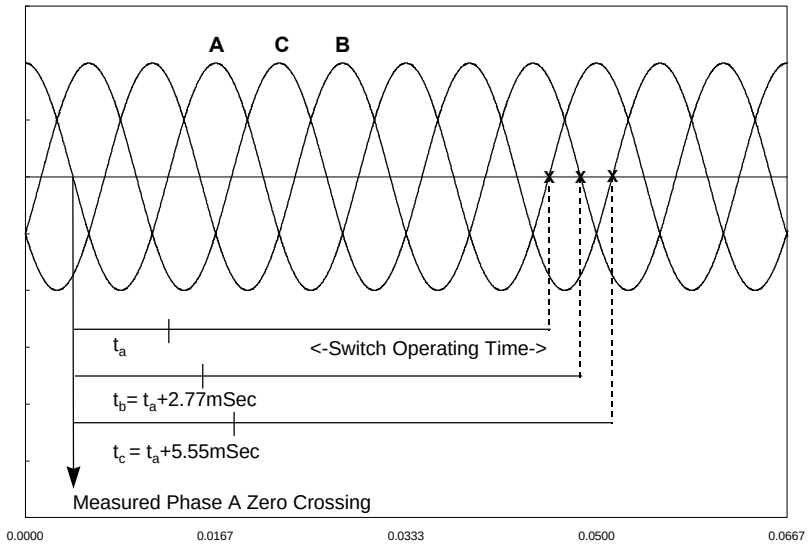

Synchronous closing control - refers to independent contact closing of each phase near a voltage zero:

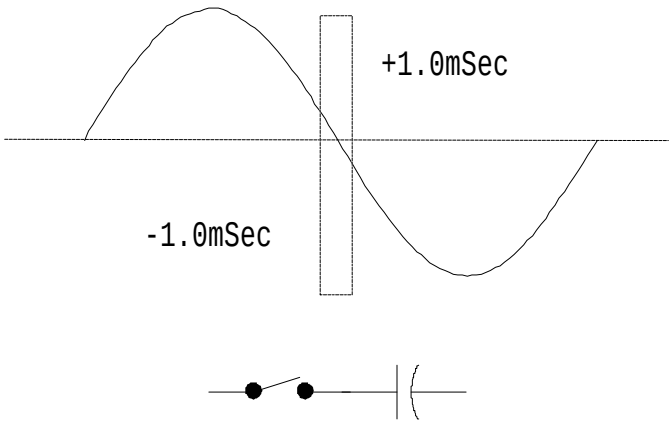

Synchronous Closing Control

```
/SWITCH
C [min phase-to-phase A-B, min phase-to-ground C (near synchronous closing)]
C Bus1->Bus2-><---Tclose<----Topen<-------Ie<---Vflash<--Request<-----Target<--O
   VAC1A CAP1A  84.80E-3 999.9E-03                                              1
   VAC1B CAP1B  84.80E-3 999.9E-03
   VAC1C CAP1C  88.96E-3 999.9E-03
C .....^.....^.........^.........^.........^.........^.........^...........^...^
```

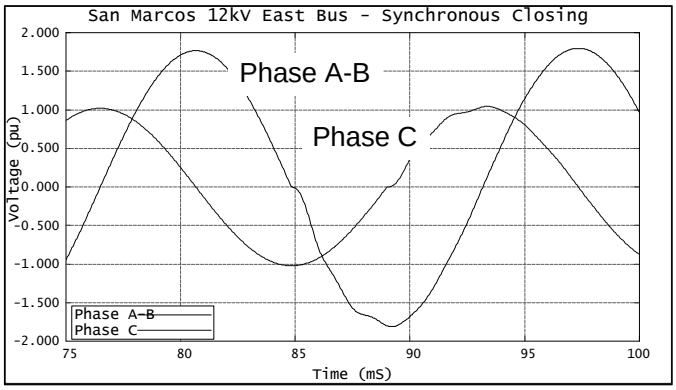

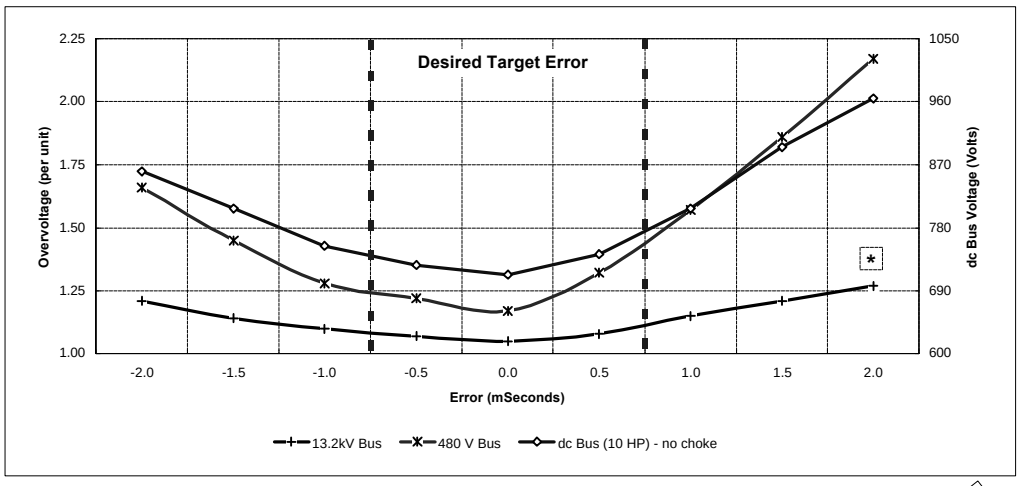

Distribution System - Synchronous

- Impact of +1.0mSecond error on energizing transient:

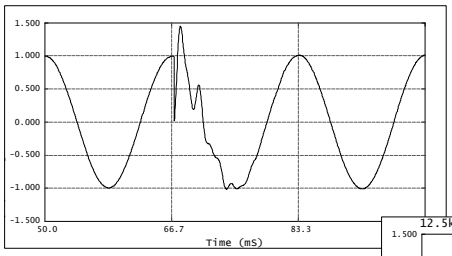

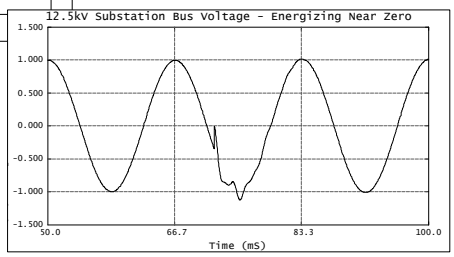

System: Voltage = 12.5kV
MVA_{sc} = 200
MVA_r = 3.0

Transmission and Distribution *Volume 3, Slide 25*

```
/SWITCH
C [max phase-to-phase A-B, max phase-to-ground C (worst case energizing)]
C BUS-->BUS--><---TCLOSE<----TOPEN<-------IE<----FLASH<--REQUEST<-----TARGET<--O
C  EASTA 12C1A  80.60E-3 999.9E-03                                            1
C  EASTB 12C1B  80.60E-3 999.9E-03
C  EASTC 12C1C  84.77E-3 999.9E-03
C .....^.....^.........^.........^.........^.........^.........^.........^...^
C [min phase-to-phase A-B, min phase-to-ground C (near synchronous closing)]
C BUS-->BUS--><---TCLOSE<----TOPEN<-------IE<----FLASH<--REQUEST<-----TARGET<--O
C  EASTA 12C1A  84.80E-3 999.9E-03                                            1
C  EASTB 12C1B  84.80E-3 999.9E-03
C  EASTC 12C1C  88.96E-3 999.9E-03
C .....^.....^.........^.........^.........^.........^.........^.........^...^
C [min phase-to-phase A-B, min phase-to-ground C (with +1.0msecond error)]
C BUS-->BUS--><---TCLOSE<----TOPEN<-------IE<----FLASH<--REQUEST<-----TARGET<--O
C  EASTA 12C1A  85.80E-3 999.9E-03                                            1
C  EASTB 12C1B  85.80E-3 999.9E-03
C  EASTC 12C1C  89.96E-3 999.9E-03
C .....^.....^.........^.........^.........^.........^.........^.........^...^
```

Preinsertion Devices

- Many options available available at T&D voltage levels.
- Devices typically include resistors and/or inductors.
- In general, resistors provide better overvoltage control and inductors provide better overcurrent control.
- Can be used in combination with synchronous closing control for added protection.
- Does not provide protection during restrike.
- May be a cost effective method when considering overvoltages at lower voltages (including customers).

Transmission and Distribution *Volume 3, Slide 26*

Optimum resistor is approximately equal to the surge impedance formed by the bank and the system:

$$R_{optimum} = \sqrt{\frac{L_s}{C}}$$

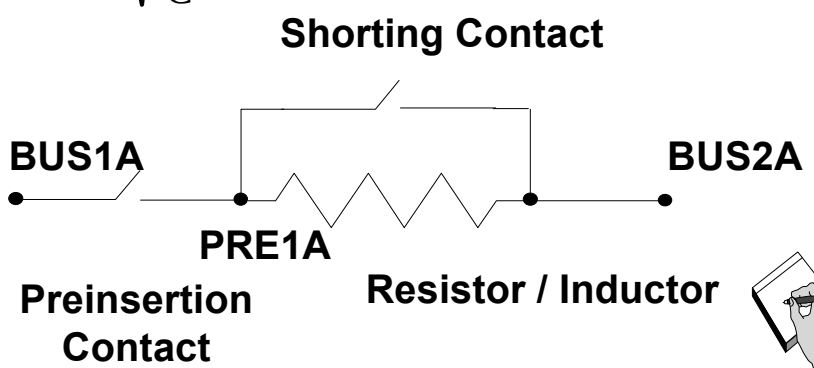

Transmission System - Inductor

- Impact of 10mH (2.0Ω) preinsertion inductor on energizing transient:

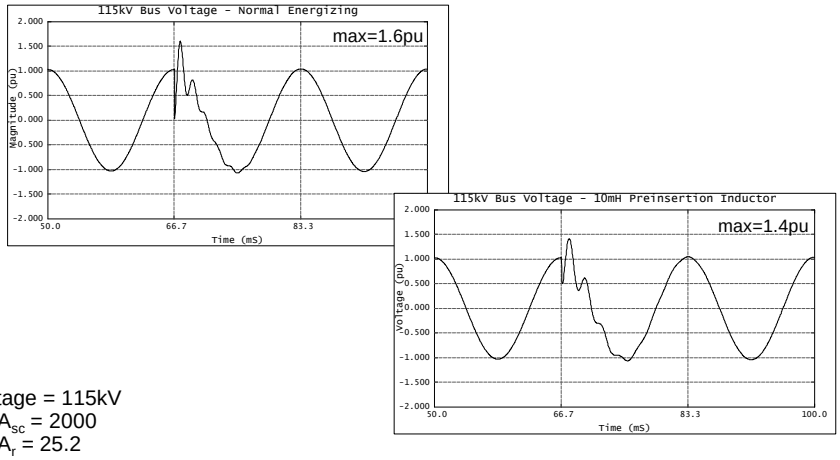

System: Voltage = 115kV
MVA_{sc} = 2000
MVA_r = 25.2


```
/SWITCH
C [max phase-to-phase A-B, max phase-to-ground C (worst case - preinsertion)]
C BUS-->BUS--><---TCLOSE<----TOPEN<-------IE<----FLASH<--REQUEST<-----TARGET<--O
   115.A PRE1A  80.60E-3 999.9E-03                                             1
   115.B PRE1B  80.60E-3 999.9E-03
   115.C PRE1C  84.77E-3 999.9E-03
C .....^.....^.........^.........^.........^.........^.........^.........^...^
C [shorting contact]
C BUS-->BUS--><---TCLOSE<----TOPEN<-------IE<----FLASH<--REQUEST<-----TARGET<--O
   115.A CAP1A  88.93E-3 999.9E-03                                             1
   115.B CAP1B  88.93E-3 999.9E-03
   115.C CAP1C  93.10E-3 999.9E-03
C .....^.....^.........^.........^.........^.........^.........^.........^...^
/BRANCH
C [pre-insertion inductor - 10.0 mH, 2.0ohms]
C <---Nodes--><---Refer--><-ohms<---mH<---uF<--------------------------------Out
C <-Bus1<-Bus2<-Bus3<-Bus4<----R<----L<----C                                  V
   PRE1A CAP1A               2.0  10.0
   PRE1B CAP1B               2.0  10.0
   PRE1C CAP1C               2.0  10.0
C .....^.....^.....^.....^.....^.....^.....^.....................................^
```

Distribution System - Resistor

- Impact of 6.4Ω preinsertion resistor on energizing transient:

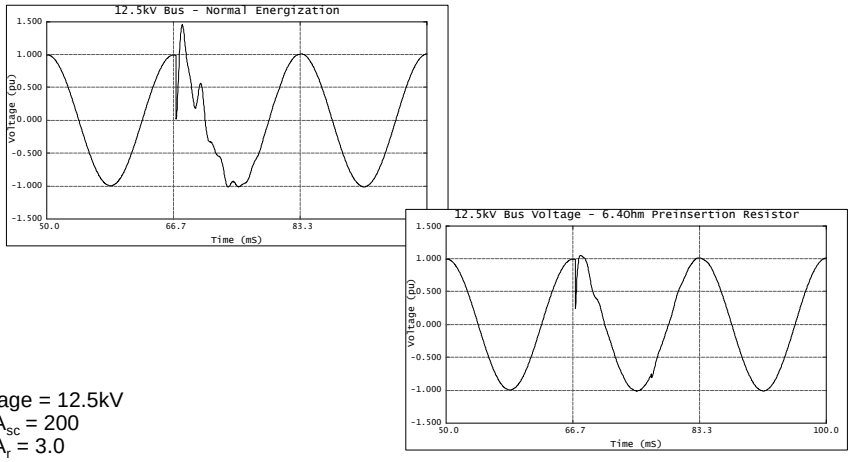

System: Voltage = 12.5kV
MVA_{sc} = 200
MVA_r = 3.0

Transmission and Distribution *Volume 3, Slide 28*

```
/SWITCH
C [max phase-to-phase A-B, max phase-to-ground C (worst case - preinsertion)]
C BUS-->BUS--><---TCLOSE<----TOPEN<-------IE<----FLASH<--REQUEST<-----TARGET<--O
   EASTA PRE1A  80.60E-3 999.9E-03                                            1
   EASTB PRE1B  80.60E-3 999.9E-03
   EASTC PRE1C  84.77E-3 999.9E-03
C .....^.....^.........^.........^.........^.........^.........^...........^...^
C [shorting contact]
C BUS-->BUS--><---TCLOSE<----TOPEN<-------IE<----FLASH<--REQUEST<-----TARGET<--O
   EASTA 12C1A  88.93E-3 999.9E-03                                            1
   EASTB 12C1B  88.93E-3 999.9E-03
   EASTC 12C1C  93.10E-3 999.9E-03
C .....^.....^.........^.........^.........^.........^.........^...........^...^
/BRANCH
C [pre-insertion resistor - 6.4ohms]
C <---Nodes--><---Refer--><-ohms<---mH<---uF<--------------------------------Out
C <-Bus1<-Bus2<-Bus3<-Bus4<----R<----L<----C                                  V
   PRE1A 12C1A              6.4
   PRE1B 12C1B              6.4
   PRE1C 12C1C              6.4
C .....^.....^.....^.....^.....^.....^.....^.....................................^
```

Prestrike / Restrike Transients

- Prestriking occurs during switch closing - high frequency inrush current is interrupted as the contacts close.
- Restriking occurs during switch opening - high frequency inrush current (and transient overvoltages) occur when the recovery voltage exceeds the dielectric strength of the switch.
- The worst case restrike occurs approximately one-half cycle after current interruption - when the recovery voltage is maximum (about 2 pu).
- The restrike transient generally results in the highest arrester duty.

Transmission and Distribution *Volume 3, Slide 29*

Prestrike: Tendency for the intercontact gap to breakdown and establish current before the contacts physically touch (because of the voltage stress between them).

Restrike/reignition: The event is termed a reignition if the switch breaks down and current conduction is re-established with half a cycle of current interruption. If the breakdown occurs later it is called a restrike.

Restrike Event

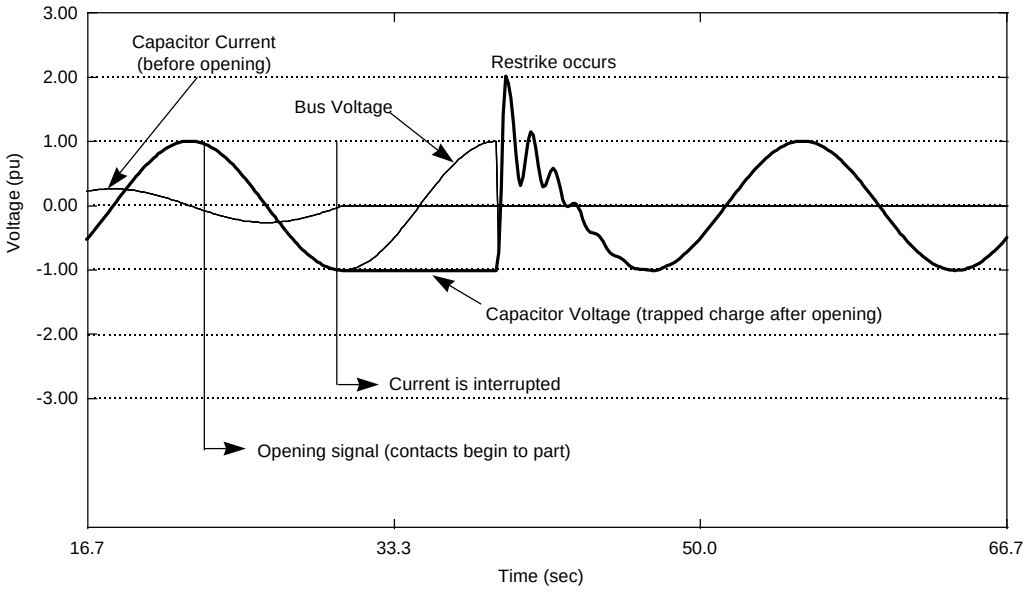

Transmission and Distribution *Volume 3, Slide 30*

The energy duty requirements for arresters at capacitor bank locations depend on the size of the capacitor and on existing arresters located at the substation. In general, the most severe duty for an arrester near a capacitor bank occurs during a switch restrike. This is due to the trapped charge on the capacitor at the instant the restrike occurs, resulting in a greater magnitude of the voltage oscillation.

It is also important to consider the coordination of MOV arresters (at the capacitor location) with any conventional gapped type arresters in the substation. It is important that the protective level of the MOV arresters be low enough to prevent operation of the gapped arresters. This is often difficult to achieve.

Theoretical Arrester Duty Calculations

Restrike on Grounded-Wye Capacitor Bank

$$I_m = \frac{\left(\sqrt{(V_s - V_c)^2 - (V_p - V_s)^2}\right)}{\sqrt{\frac{L_s}{C}}} \text{ amps}$$

$$t = \frac{L_s I_m}{V_p - V_s} \text{ sec}$$

$$E = \frac{1}{2} I_m * t * V_p$$

For First Restrike:

V_s = peak line-to-neutral voltage
V_p = arrester protective level
$V_c = -V_s$

For Worst Subsequent Restrike:

Same as first except $V_c = -V_p$

Theoretical Arrester Duty Calculations

Two Phase Restrike on Ungrounded-Wye Capacitor Bank

$$I_m = \frac{\left(\sqrt{(V_{LL} - V_c)^2 - (2V_p - V_{LL})^2}\right)}{2\sqrt{\frac{L_s}{C}}}$$

$$t = \frac{2L_s I_m}{2V_p - V_{LL}}$$

$$E = \frac{1}{2} I_m * t * V_p$$

For First Restrike:

- V_{LL} = peak line-to-line voltage
  V_p = arrester protective level
  V_c = -2.37 x peak line-to-neutral voltage

For Worst Subsequent Restrike:

- Same as first except $V_c = -2V_p$

Transmission and Distribution *Volume 3, Slide 33*

Theoretical Arrester Energy Duty

- Theoretical arrester energy duty during a capacitor restrike as a function of MOV arrester protective level (pu of normal peak line-to-neutral voltage):

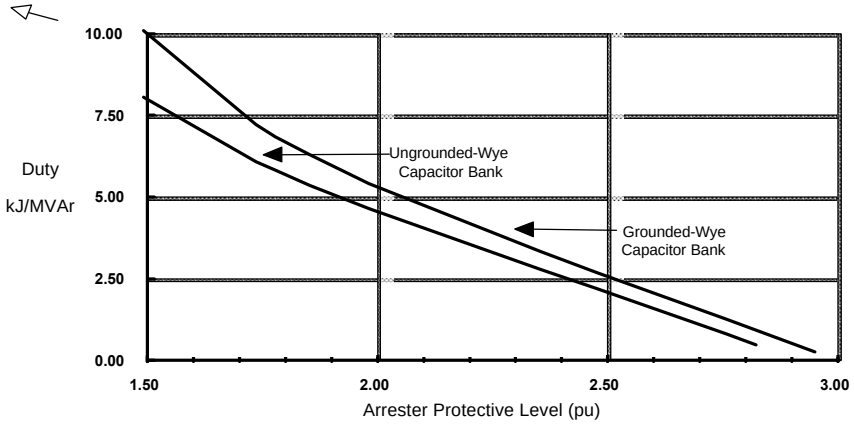

Example - Arrester Duties During a Restrike

- Theoretical Arrester Energy Duty During a Capacitor Restrike, Arrester Energy Capability, and Simulation Results as a Function of MOV Arrester Protective Level (pu of normal peak line-to-neutral voltage)

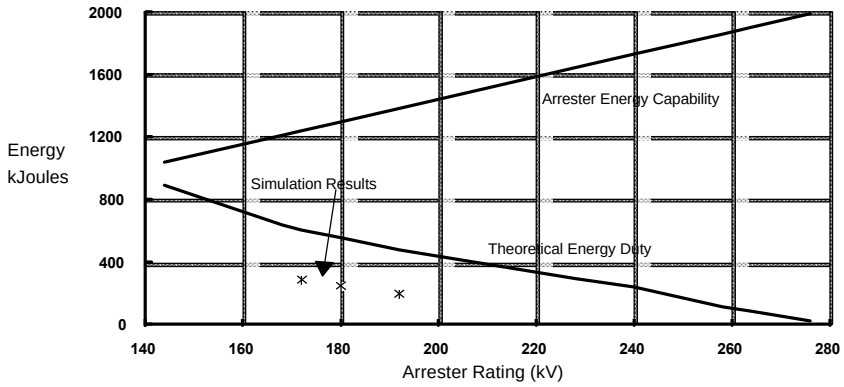

Transmission and Distribution *Volume 3, Slide 35*

It is also important to consider the coordination of MOV arresters (at the capacitor location) with any conventional gapped type arresters in the substation. It is important that the protective level of the MOV arresters be low enough to prevent operation of the gapped arresters. This is often difficult to achieve. If coordination is not possible, there are three options for arrester protection at the substation involved:

1. Replace all of the gapped type arresters in the substation with MOV arresters. The arresters will share the energy duty in the event of a restrike and there should be no danger of arrester failure.
2. Add one set of MOV arresters. This will greatly decrease the probability that a conventional arrester will fail during a capacitor restrike event because the MOV arrester will reduce the chance of a conventional arrester sparkover. The minimum size MOV should be used for best coordination with existing arresters.
3. Use only conventional gapped type arresters at the substation. This option relies on the integrity of the capacitor switch to prevent a restrike event. If a restrike would occur, it is unlikely the conventional arresters would be able to withstand the associated energy duty.

Arrester Representation

180kV MOV Arrester:

```
C 180kV MOV Arrester
C Multi-Exponential No-Gap Zinc Oxide Surge Arrester
C
C  Rating = 180000.0   V-mult =  1.00000E+00   I-mult =  1.00000E+00    Gapless
C
C <-Bus1<-Bus2<-Bus3<-Bus4<------------5555.<---------------------------------O
92 ARR1A                               5555.
C .....^.....^.....^.....^.............^^^^.....................................^
C              V-reference             V-flashover
   3.4900000000000000E+05  -1.0000000000000000E+02
C               Multiplier                Exponent                     V-min
   3.7363356723952700E+04   5.5452573559178430E+01   7.3020170272569060E-01
   8.5527493627022090E+03   4.5513022365167910E+01   8.6213753581662090E-01
   2.0650451050100810E+03   3.0974711296765890E+01   9.0687679083094620E-01
   1.5110334240427700E+03   2.4153014752610310E+01   9.5524355300859630E-01
   1.2401614274164330E+03   1.2594017637607980E+01   9.8305444126074550E-01
                      9999
C <-Bus1<-Bus2<-Bus3<-Bus4<------------5555.<---------------------------------O
92 ARR1B       ARR1A                   5555.                                  4
92 ARR1C       ARR1A                   5555.
C .....^.....^.....^.....^.............^^^^.....................................^
```



```
C [switch opening - phase A fails to open]
C BUS-->BUS--><---TCLOSE<----TOPEN<-------IE<----FLASH<--REQUEST<-----TARGET<--O
   BUS_A CAP1A  -1.00E-3 999.9E-03
   BUS_B CAP1B  -1.00E-3  25.0E-03
   BUS_C CAP1C  -1.00E-3  25.0E-03
C .....^.....^.........^.........^.........^.........^.........^.........^...^
C [first restrike on phase B]
C BUS-->BUS--><---TCLOSE<----TOPEN<-------IE<----FLASH<--REQUEST<-----TARGET<--O
   CAP1B BUS_B  38.90E-3  39.0E-03
C .....^.....^.........^.........^.........^.........^.........^.........^...^
C [second restrike on phase B]
C BUS-->BUS--><---TCLOSE<----TOPEN<-------IE<----FLASH<--REQUEST<-----TARGET<--O
C  CAP1B BUS_B  47.20E-3  47.3E-03
C .....^.....^.........^.........^.........^.........^.........^.........^...^
C
C [third restrike on phase B]
C BUS-->BUS--><---TCLOSE<----TOPEN<-------IE<----FLASH<--REQUEST<-----TARGET<--O
   CAP1B BUS_B  55.56E-3 999.9E-03
C .....^.....^.........^.........^.........^.........^.........^.........^...^
```

Example Restrike Waveforms

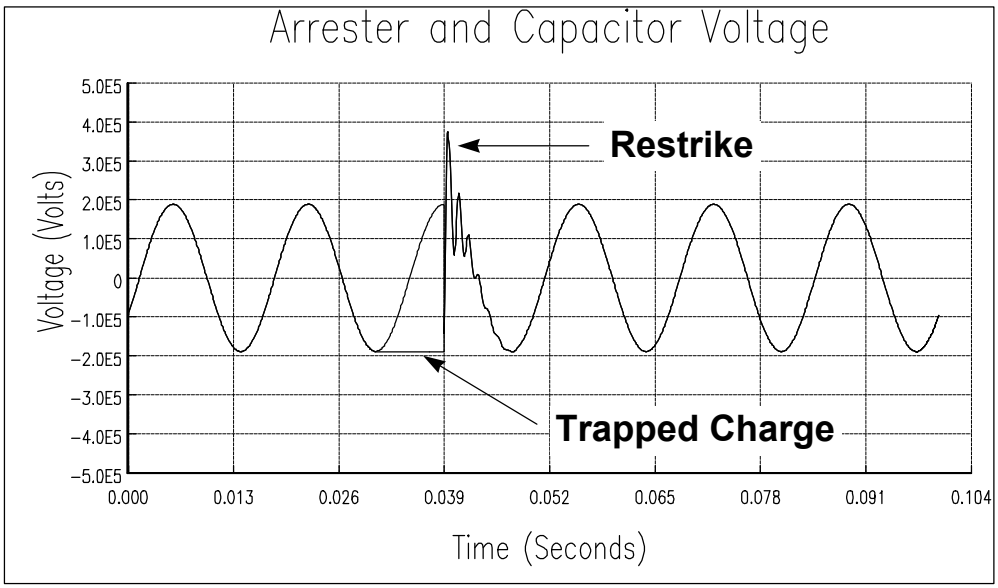

The arrester energy during a restrike depends on the following parameters:

- Capacitor configuration (grounded vs. ungrounded)
- Capacitor size
- Existence of other parallel capacitors
- Source strength
- Number of lines leaving substation
- Nearby capacitor banks
- Arrester protective level

The transient voltages on a capacitor bank and the recovery voltages across the switch can be reduced by installing arresters on the capacitor side of the switching device. If the switch is rated for the recovery voltages involved, then the arresters can be located on either the capacitor side or source side of the switch.

Example Restrike Waveforms - cont

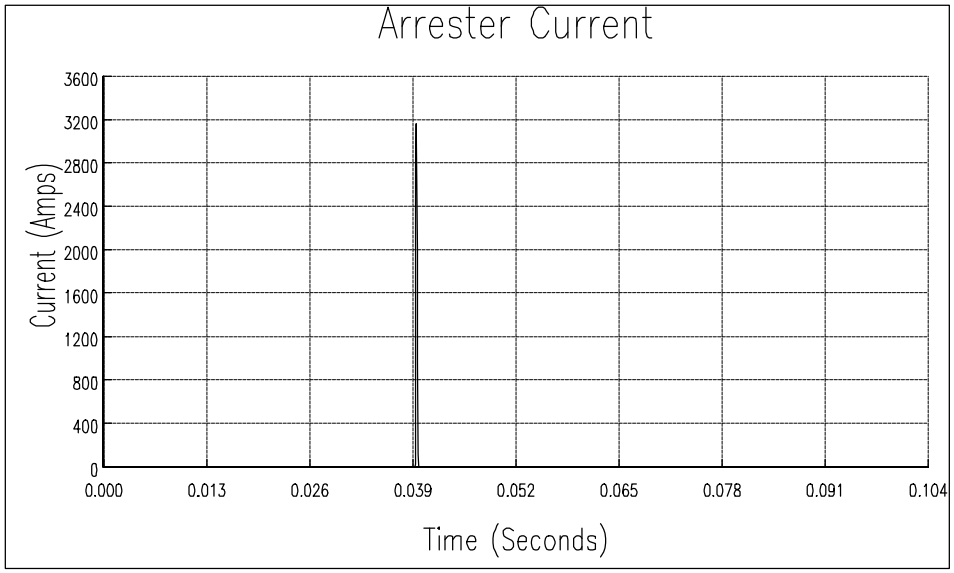

Example Restrike Waveforms - cont

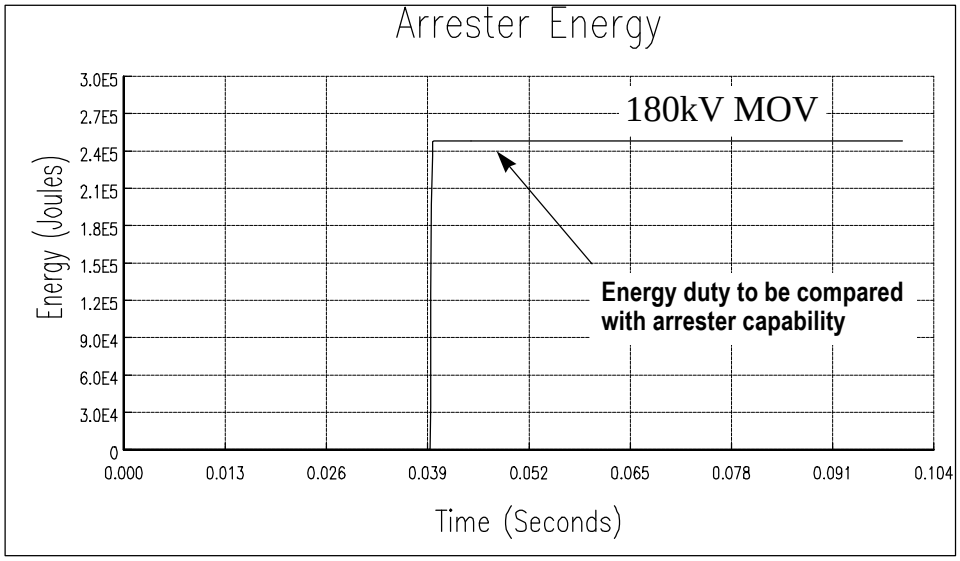

Transmission and Distribution *Volume 3, Slide 39*

Multiple Restrike Event

- Impact of MOV arrester on opening (restrike) transient:

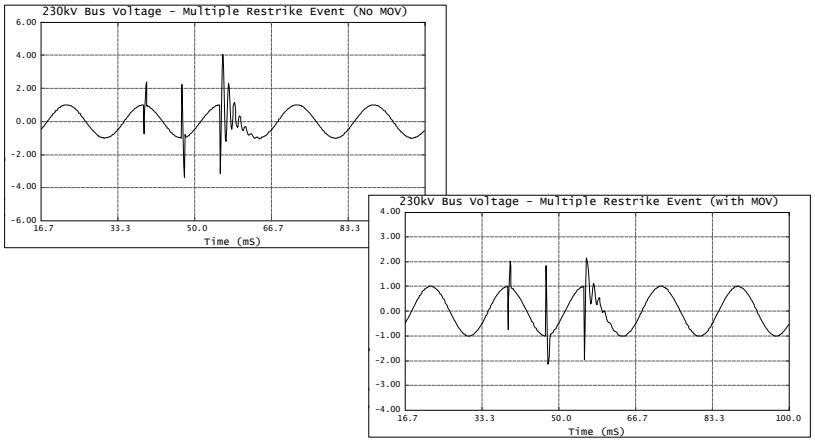

Transmission and Distribution *Volume 3, Slide 40*

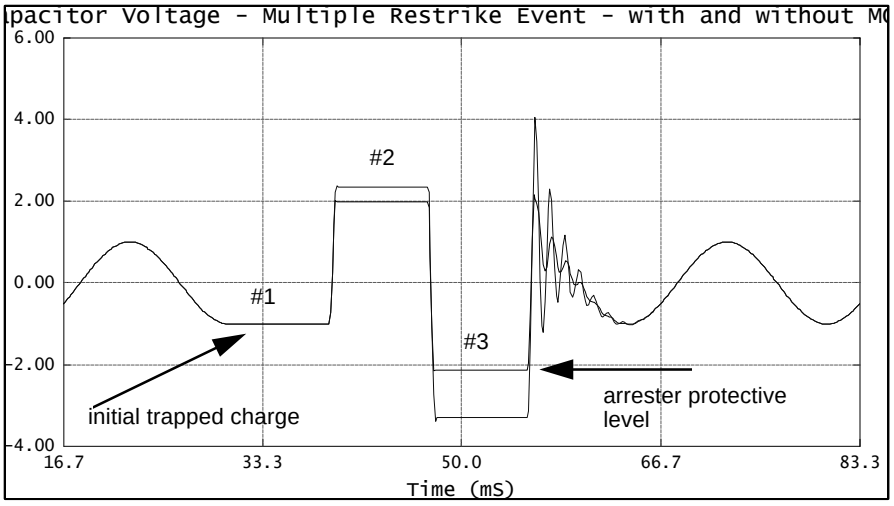

Voltage Magnification - Case Study

- Phenomena typically occurs when a large capacitor is energized at a higher voltage level, resulting in magnification of the transient at a lower voltage capacitor bank.

CAPMAG.DAT

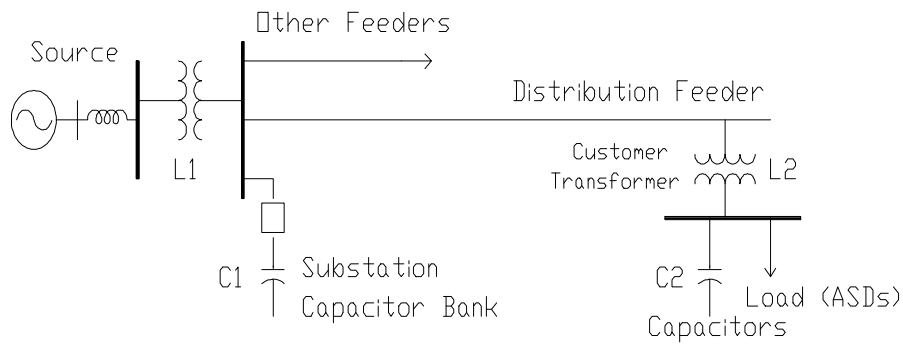

$$f_1 = \frac{1}{2 \cdot p \cdot \sqrt{L_1 \cdot C_1}} \qquad f_2 = \frac{1}{2 \cdot p \cdot \sqrt{L_2 \cdot C_2}}$$

Transient voltages associated with normal capacitor energizing operations are generally not a concern at the switched capacitor location. However, significant transient voltages can occur at lower voltage capacitor banks or cables due to magnification of the energizing transient.

Computer simulations and in-plant measurements have indicated that magnified transients between 2.0 and 4.0 per-unit are possible over a wide range of low voltage capacitor sizes. Typically, the transient overvoltages will simply damage low-energy protective devices (MOVs) or cause a nuisance trip of a power electronic device. However, several cases of complete failure of customer equipment (single device) have occurred.

Conditions for Voltage Magnification

- The highest transient voltages occur at the lower voltage capacitors (480 Volt bus) when the following conditions are met:

  [1] The natural frequencies f_1 and f_2 are nearly equal.

  [2] The capacitive MVAr of the switched capacitor bank is significantly greater (>10) than the lower voltage capacitor.

  [3] There is little damping on the low voltage system (mostly motor load).

The magnified transient at the low voltage bus can reach 4 pu.

- If F_1 is approximately equal to the series resonant frequency (F_2) of the transformer - capacitor combination, the potential exists for a high current (I_{pk}), resulting in a large bus overvoltage (V_{bus})

60 Hz + Transient Voltage

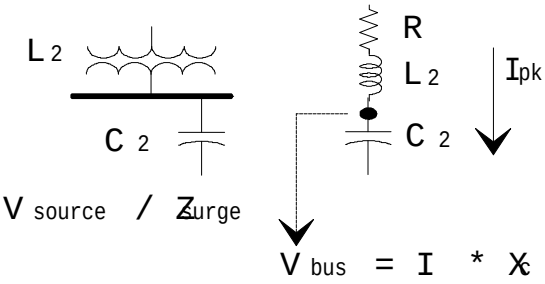

$$X_c = \frac{1}{\omega C}$$

System Model - Magnification

Equivalent Source:

Z = 0.05 + j 2.00 % @ 10 MVA = 0.0595 + j 2.3805 Ω

Capacitor Banks:

34.5 kV, 9.0 MVAr	20.06 μF
480 V, 450 kVAr	5180.7 μF

Distribution Circuit:

Z = 1.50 + j 3.00 % @ 10 MVA = 1.7854 + j 3.5708 Ω

Transmission and Distribution *Volume 3, Slide 43*

```
C <---------------------------------------------12.5kV Equivalent
C <---Nodes--><---Refer--><-Ohms<---------mH
C <-Bus1<-Bus2<-Bus3<-Bus4<----R<----------L
51 SRC1A 12_5A            0.130        2.07
52 SRC1B 12_5B            0.130        2.07
53 SRC1C 12_5C
C .....^.....^xxxxxxxxxxxx.....^...........^
C <---Nodes--><---Refer--><-ohms<---mH<---uF<-------------------------------Out
C <-Bus1<-Bus2<-Bus3<-Bus4<----R<----L<----C                                 V
   SRC1A 12_5A            250.0
   SRC1B 12_5B            250.0
   SRC1C 12_5C            250.0
C .....^.....^.....^.....^.....^.....^.....^.................................^
C <---------------------------------------------12.5kV Distribution Circuit
C <---Nodes--><---Refer--><-ohms<---mH<---uF                               Out
C <-Bus1<-Bus2<-Bus3<-Bus4<----R<----L<----C                                 V
   12_5A XFMRA            0.500 1.000                                        1
   12_5B XFMRB            0.500 1.000                                        1
   12_5C XFMRC            0.500 1.000                                        1
C .....^.....^.....^.....^.....^.....^.....^.................................^
```

System Model - cont

Step-down Transformer:

Z = 3.70% @ 2000 kVA, X/R = 30

High Side:	base Z = 595 Ω	Z = 0.367 + j 11.01 Ω
Low Side:	base Z = 0.1152 Ω	Z = 0.00691 + j 0.21312 Ω

Load:

1500 kVA, 480 V, 95% pf 0.1459 + j 0.0479 Ω

Arrester:

480 V, (connected 277 V), 700 V @ 500 A (36x90)


```
C <-----------------------------------------------Step-Down Transformer
C Transformer-<--Ref<---><--Iss<--Phi<-Name<-Rmag
  TRANSFORMER                          TX01
C ...........^.....^      .....^.....^.....^.....^
            9999
C <---Nodes--><----------><-ohms<---mH<---kV
C <-Bus1<-Bus2<--Ignore--><----R<----L<-volt<---------------------------------O
01 XFMRA XFMRB             0.520 20.72 12.47
02 4801A                   0.003 0.010 0.277
C .....^.....^            .....^.....^.....^                                 ^
  TRANSFORMER   TX01                   TX02
C ...........^.....^      .....^.....^.....^.....^
01 XFMRB XFMRC
02 4801B
C .....^.....^            .....^.....^.....^                                 ^
  TRANSFORMER   TX01                   TX03
C ...........^.....^      .....^.....^.....^.....^
01 XFMRC XFMRA
02 4801C
C .....^.....^            .....^.....^.....^                                 ^
```

Example Magnification Waveforms

- 34.5kV Bus and Low Voltage Bus Voltage (@ power factor correction capacitor location):

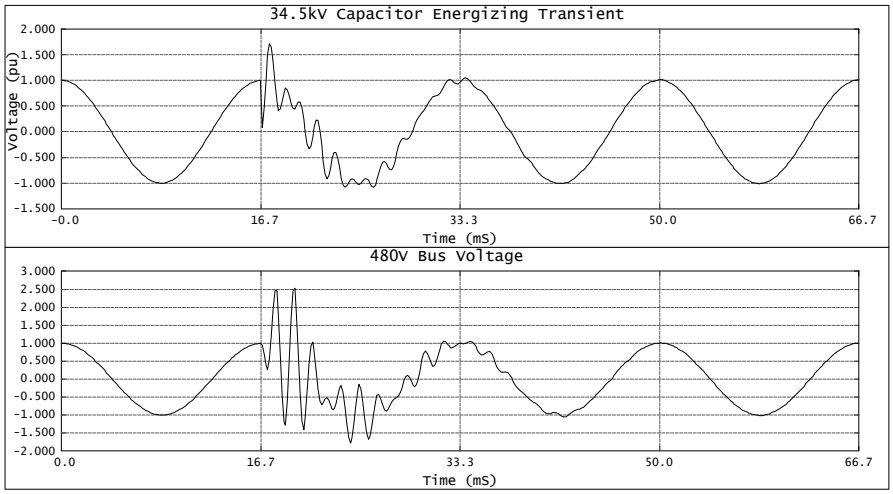


```
C <---Nodes--><--Refer--->
C <-Bus1<-Bus2<-Bus3<-Bus4<------------5555.<---------------------------------O
92  MOVA                                5555.                                 4
C .....^.....^.....^.....^.....^.......^^^^^.................................^
C <-----------------Vref<-------------------Vflash
                    700.0                     0.0
C ......................^........................^
C <-----------------Rlin<--------------------Expon<--------------------Vmin
                    500.0                    25.0                      0.5
C ......................^........................^........................^
                    9999.
C <---Nodes--><--Refer--->
C <-Bus1<-Bus2<-Bus3<-Bus4<------------5555.<---------------------------------O
92  MOVB        MOVA                    5555.                                 4
C .....^.....^.....^.....^.....^.......^^^^^.................................^
C <---Nodes--><--Refer--->
C <-Bus1<-Bus2<-Bus3<-Bus4<------------5555.<---------------------------------O
92  MOVC        MOVA                    5555.                                 4
C .....^.....^.....^.....^.....^.......^^^^^.................................^
```

Effect of Compensation and Load Level

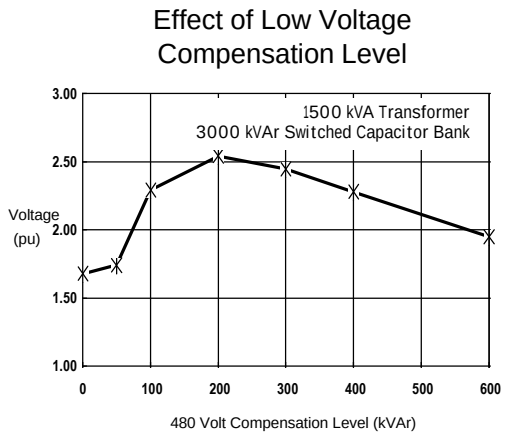

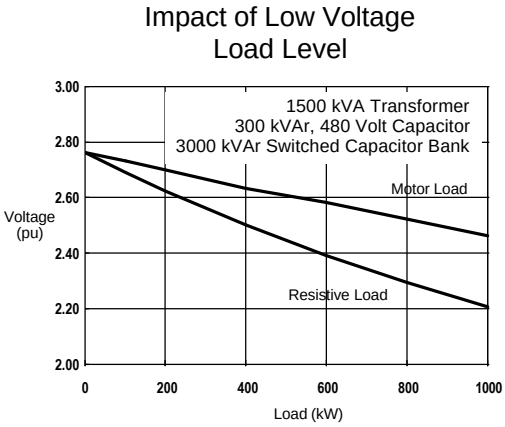

Transmission and Distribution *Volume 3, Slide 47*

```
C <--------------------------------480 Volt Capacitor Banks
C
C <---Nodes--><---Refer--><-ohms<---mH<---uF<-------------------------------Out
C <-Bus1<-Bus2<-Bus3<-Bus4<----R<----L<----C                                V
C  4801A 4801B                        383.8
C  4801B 4801C                        383.8
C  4801C 4801A                        383.8
C .....^.....^.....^.....^.....^.....^.....^....100 KVAr......................^
   4801A 4801B                        767.5
   4801B 4801C                        767.5
   4801C 4801A                        767.5
C .....^.....^.....^.....^.....^.....^.....^....200 KVAr......................^
C  4801A 4801B                       1151.3
C  4801B 4801C                       1151.3
C  4801C 4801A                       1151.3
C .....^.....^.....^.....^.....^.....^.....^....300 KVAr......................^
```

Effect of Low Voltage Filters and Arresters

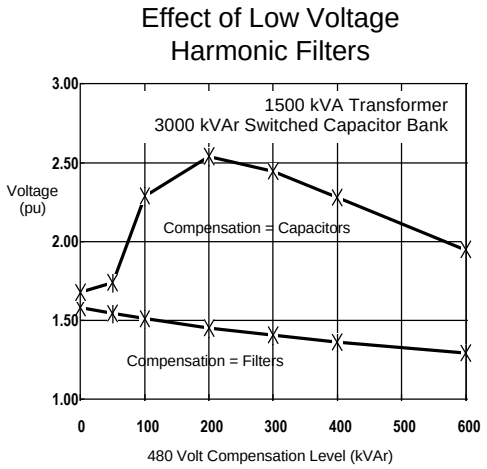

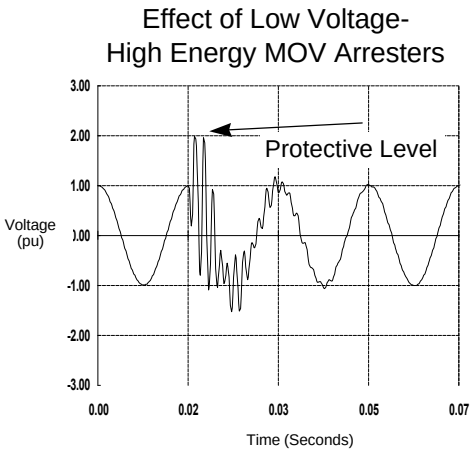

Transmission and Distribution *Volume 3, Slide 48*

```
C <--------------------------------480 Volt Filter Bank
C
C <---Nodes--><---Refer--><-ohms<---mH<---uF<-------------------------------Out
C <-Bus1<-Bus2<-Bus3<-Bus4<----R<----L<----C                                V
   4801A FIL1A                  0.140
   4801B FIL1B                  0.140
   4801C FIL1C                  0.140
C .....^.....^.....^.....^.....^.....^.....^....4.7th Filter Reactor...........^
   FIL1A FIL1B                        766.6
   FIL1B FIL1C                        766.6
   FIL1C FIL1A                        766.6
C .....^.....^.....^.....^.....^.....^.....^....200 kVAr......................^
```

Solutions to Magnification Phenomena

1. Controlling the transient overvoltage at the source, on the utility system is sometimes possible.
   a) Synchronous closing control
   b) Closing capacitor bank through a resistor/inductor first
2. Surge arresters at the customer location can be used.
3. Conversion of capacitor banks to harmonic filters is effective for control of the magnification problem.

Transmission and Distribution *Volume 3, Slide 49*

Solutions to the voltage magnification problem usually involve:

a) Detuning the circuit by changing capacitor bank sizes, moving banks, and/or removing banks from service.

b) Switching large banks in more than one section.

c) Using one of the available overvoltage control methods, such as:

i) preinsertion resistors

ii) preinsertion inductors

iii) synchronous closing control

d) Applying surge arresters (MOVs) at the remote location.

e) Converting low voltage power factor correction banks into harmonic filters (detuning the circuit).

Frequency Scans

- Determine frequency response characteristic of system
  - Ground all voltage sources
  - Inject 1.0 amp current source (60 Hz) at desired bus
  - Plot magnitude of resultant voltage to determine frequency response

```
BEGIN NEW DATA CASE
FREQUENCY SCAN          60.0    20.0    1500.0
C ...........^.............^.......^.........^
```

Transmission and Distribution *Volume 3, Slide 50*

```
C <-----------<-------Fstart<---Finc<----Fstop
FREQUENCY SCAN          60.0    20.0    1500.0
C ...........^.............^.......^.........^
.
.
.
BEGIN NEW DATA CASE
C <--Bus<I<-----Ampl<-----Freq<----Phase<-------A1<------T1><---Tstart<----Tstop
14  480A-1       1.0      60.0       0.0                        -1.000      9999
C .....^.^.........^.........^.........^.........^........^..........^.........^
```

Frequency Response Characteristic

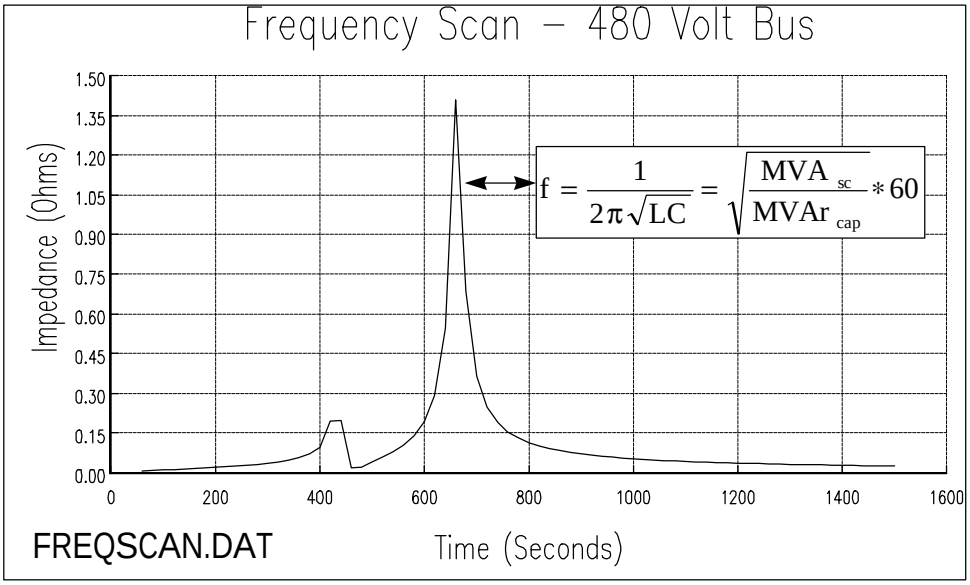

$$f = \frac{1}{2\pi\sqrt{LC}} = \sqrt{\frac{MVA_{sc}}{MVAr_{cap}} * 60}$$

Transmission and Distribution *Volume 3, Slide 51*

Transients at Transformer Terminations

Simplified Oneline Diagram

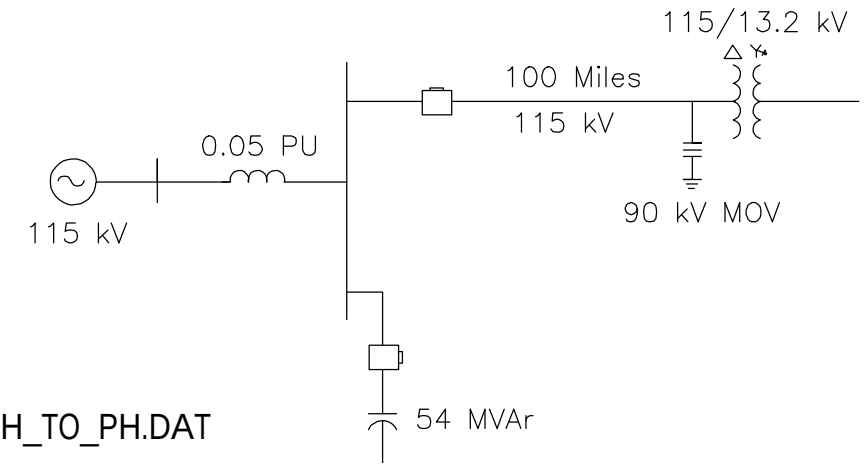

PH_TO_PH.DAT

Energizing a shunt capacitor bank can subject three phase transformers to excessive phase-to-phase and/or high frequency transients. The basic circuit configuration of concern consists of a three phase transformer at one terminal of a radial line and a switched capacitor bank at the other terminal. The high phase-to-phase voltages are a result of traveling wave reflections at the transformer termination. It is possible to obtain transients approaching twice the peak system voltage on two phases with opposite polarity, resulting in a phase-to-phase transient of approximately four times the normal peak phase-to-ground voltage. These transients can easily exceed the phase-to-phase withstand capability of three phase transformers.

System Model - xfmr Terminations

Equivalent Source:

Z(1) = 0.08 + j 0.50 % @ 10 MVA = 1.10 + j 6.63 Ω
Z(0) = 0.04 + j 0.24 % @ 10 MVA = 0.52 + j 3.11 Ω

Capacitor Bank:

115 kV, 54.0 MVAr 10.83 μF

Capacitor Energizing Frequency:

$$f = \frac{1}{2\pi\sqrt{LC}} = \frac{1}{2\pi\sqrt{17.6\text{mH} * 10.8\mu\text{F}}} = 365\text{Hz}$$


```
C
C <---Nodes--><---Refer--><-Ohms<---------mH
C <-Bus1<-Bus2<-Bus3<-Bus4<----R<----------L
51 SRC1A  SRCA            0.519       8.259
C .....^.....^.....^.....^.....^...........^  Zero Sequence
52 SRC1B  SRCB            1.104      17.572
C .....^.....^xxxxxxxxxxxx.....^...........^  Positive Sequence
53 SRC1C  SRCC
C .....^.....^xxxxxxxxxxxx.....^...........^
C
C Surge Impedance (simulate system damping)
C
C <---Nodes--><---Refer--><-Ohms<---mH<---uF<----------------------------------O
C Bus1->Bus2->Bus3->Bus4-><----R<----L<----C                                   V
   SRC1A  SRCA            420.0
   SRC1B  SRCB            420.0
   SRC1C  SRCC            420.0
C .....^.....^.....^.....^.....^.....^.....^xxxxxxxxxxxxxxxxxxxxxxxxxxxxxxxxxxxx^
C
```

System Model - cont

Transmission Line:

Voltage: 115 kV
Length: 100 miles
Tower: Double circuit steel

Phase Conductor:
1750 AA/61 (Jessamine)
O.D. = 1.525"
Rdc = 0.0523 Ω/mi

Ground Conductor:
3 #6 Alumoweld
O.D. = 0.349"
Rdc = 3.4468 Ω/mi

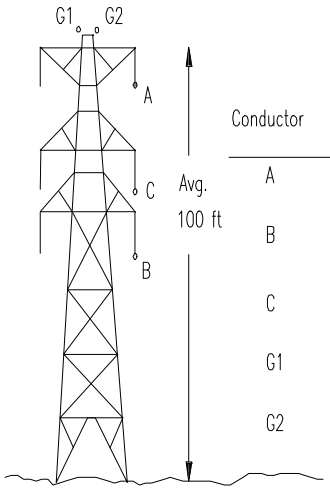

Conductor	Location Hor	Location Ver
A	14.3	84.2
B	14.3	52.2
C	18.6	67.2
G1	−8.0	100
G2	8.0	100

Earth resistivity = 55.28 Ω-meters

Transmission Line Calculations

```
BEGIN NEW DATA CASE
LINE CONSTANTS
C xxxxxxxxxxxxxxxxx<-Model--><-Matrix-><-Scale--><-Fmin---><-NpDec--><-NDec--->
LINE-MODEL         FD-LINE   QREAL     LOG       0.1       10        8
C xxxxxxxxxxxxxxxxx.........^.........^.........^.........^.........^.........^
ENGLISH                                2
C                I
C                X        R
C P    S       R T        E      D       H       V       V       S     A       N
C H    K       E Y        A  CM  I   M   O    M  T    M  M   CM  E DEG L       B
C A    I       S P        C  IN  A  FT   R   FT  O   FT  I   IN  P     P       U
C S<---N<------I-E<-------T------M<------I<------W<------D<------A<----H<----> N
  0  0.5  3.4468 4           0.349   -8.00   100.0   100.0
  0  0.5  3.4468 4           0.349    8.00   100.0   100.0
C ^....^.......^.^........^......^.......^.......^.......^.......^.....^xxxxxx.^
  1  0.5  0.0523 4           1.525    14.3    84.2    84.2
  2  0.5  0.0523 4           1.525    18.6    67.2    67.2
  3  0.5  0.0523 4           1.525    14.3    52.2    52.2
C ^....^.......^.^........^......^.......^.......^.......^.......^.....^xxxxxx.^
BLANK
C <--RHO<--FMARTIX<--------------------------LENGTH<-ISEG
   55.28     5000.                              100.0     0
C .....^.........^xxxxxxxxxxxxxxxxxxxxxxxx........^.....^
.NODES              SEN_A     REC_A     SEN_B     REC_B     SEN_C     REC_C
C xxxxxxxxxxxxxxxxx.....^xxxx.....^xxxx.....^xxxx.....^xxxx.....^xxxx.....^
BLANK END OF FREQUENCY DATA
BLANK END OF DATA CASE
```

System Model - cont

Transformer:

Rating:	12/16/20 MVA
Voltage:	115/13.2 kV
Connection:	Delta / Wye-Gnd

Test Report Data:

Load loss watts:	45228 (3 phase)
No load loss watts:	16682 (3 phase)
Exciting current:	0.446% @ 100% voltage
Impedance:	6.83% @ 12 MVA

System Model - cont

Transformer - cont

Ztx = 6.83% @ 12 MVA

Assume 1/2 of xfmr impedance in each winding (per unit)

Ztx = 0.314 + 5.680 % @ 10 MVA

$$Z_{base(winding)} = \frac{kV^2_{(winding)}}{MVA_{(winding)}}$$

$Z_{(HS)} = 6.23 + j\ 112.68\ \Omega$

$Z_{(LS)} = 0.027 + j\ 0.495\ \Omega$

Transformer Representation

```
C 12MVA 115/13.2kV Transformer, Ztx = 6.83% @ 12 MVA
C Modeled Using Single Phase Saturable Transformer
C
C TRANSFORMER <--Ref<----><--Iss<--Phi<-Name<-Rmag<---------------------------O
  TRANSFORMER                           XFMR1
C ...........^.....^xxxxxx.....^.....^.....^.....^xxxxxxxxxxxxxxxxxxxxxxxxxxxx^
            9999
C
C <---Nodes--><----------><-Ohms<---mH<---kV
C <-Bus1<-Bus2<----------><---Rk<---Lk<-Volt---------------------------------->O
01  THSA  THSB             6.229 298.9 115.0
02  TLSA                   .0274 1.313  7.62
C .....^.....^xxxxxxxxxxx.....^.....^.....^xxxxxxxxxxxxxxxxxxxxxxxxxxxxxxxxxxx^
C TRANSFORMER <--Ref<----><--Iss<--Phi<-Name<-Rmag<---------------------------O
  TRANSFORMER  XFMR1                    XFMR2
C ...........^.....^      .....^.....^.....^.....^
C <---Nodes--><----------><-Ohms<---mH<---kV
C <-Bus1<-Bus2<----------><---Rk<---Lk<-Volt---------------------------------->O
01  THSB  THSC
02  TLSB
C .....^.....^            .....^.....^.....^                                  ^
C TRANSFORMER <--Ref<----><--Iss<--Phi<-Name<-Rmag<---------------------------O
  TRANSFORMER  XFMR1                    XFMR3
C ...........^.....^      .....^.....^.....^.....^
C <---Nodes--><----------><-Ohms<---mH<---kV
C <-Bus1<-Bus2<----------><---Rk<---Lk<-Volt---------------------------------->O
01  THSC  THSA
02  TLSC
C .....^.....^            .....^.....^.....^                                  ^
```

System Model - cont

Arresters:

90 kV MOV - Single exponential no-gap

$$i = p\left(\frac{V}{V_{ref}}\right)^q$$

p and q are determined from maximum switching surge protective level (MSSPL) at indicated current

Vref = 169 kV, p = 500 amps ,and q $\approx$ 30

Arrester Representation #1

90kV MOV:

```
C 90 kV MOV (at transformer)
C Single-Exponential No-Gap Zinc Oxide Surge Arrester
C
C             <--REFER -->
C <-BUS1<-BUS2<-BUS3<-BUS4
92  AR1A                              5555.                                   4
C .....^.....^.....^.....^............5555.....................................o
C
C ------------------VREF<-------------------VFLASH<-------------------VZERO
                 169000.                    -100.
C ......................^........................^........................^
C ------------------COEF<-------------------EXPON<-------------------VMIN
                    500.                      30.                        .5
C ......................^........................^........................^
                    9999
C
C <-BUS1<-BUS2<-BUS3<-BUS4
92  AR1B        AR1A                  5555.                                   4
92  AR1C        AR1A                  5555.                                   4
C .....^.....^.....^.....^............5555.....................................o
```

System Model - cont

Arresters cont:

90 kV MOV - Multi-exponential no gap (see ARRDAT)

The voltage vs current data is determined from 1mSec wavefront characteristic (Note 1.0 pu = 211000 V)

I	Vpu	Voltage
1	0.684	144324
10	0.713	150443
100	0.750	158250
500	0.790	166690
1000	0.813	171543
2000	0.859	181249

MOV Setup

90kV MOV:

```
BEGIN NEW DATA CASE
SATURATION
     77.
C <-----NEXP<-----IPHASE<-----ERRLIM<-----IPRZNO<-------VREF<-----VFLASH
          -1           3         .05           1     169000.         0.0
C .........^...........^...........^...........^...........^...........^
C
C <---RATING<----OP_VOLT<-------MULT<-----I_MULT<-------FLAG<------I_MIN
     90000.0      90000.         1.0         1.0         0.0        .001
C .........^...........^...........^...........^...........^...........^
C
C <--CURRENT<---VOLTAGE
         1.0  144324.00
        10.0  150443.00
       100.0  158250.00
       500.0  166690.00
      1000.0  171543.00
      2000.0  181249.00
C .........^...........^
BLANK CARD ENDING CHARACTE
```

```
C <-BUS1<-BUS2<-BUS3<-BUS4
92  AR1A                            5555.                                   4
C ------------------VREF<------------------VFLASH<------------------VZERO
  1.6900000000000000E+05   -1.0000000000000000E+02
C ....................^..........................^.......................^
C ------------------COEF<------------------EXPON<------------------VMIN
  6.3266119438704450E+03    5.5452573559178560E+01   7.5396566346528330E-01
  1.9910288671563670E+03    4.5513022365169120E+01   8.9019526627218860E-01
  7.6579186503951430E+02    3.0974711296765370E+01   9.3639053254437710E-01
  6.9716630725708730E+02    2.4153014752609720E+01   9.8633136094674460E-01
  8.2853616588556050E+02    1.2594017637608060E+01   1.0150473372781060E+00
C ....................^..........................^.......................^
                     9999
C <-BUS1<-BUS2<-BUS3<-BUS4
92  AR1B        AR1A                5555.                                   4
92  AR1C        AR1A                5555.                                   4
C .....^.....^.....^.....^...........5555.....................................O
```

System Model - cont

Arresters cont:

96 kV Gapped SiC

Ohio Brass - Station Class, Vflash = 218000 V
(max. Switching Surge Sparkover)

Maximum IR Discharge Voltage (kV crest vs I)

V	I
1500	**154000**
3000	**173000**
5000	**188000**
10000	**213000**
20000	**247000**
40000	**296000**

Arrester Representation

96kV SiC:

```
C                              -> -1: GAP FLASHES, STAYS CLOSED
C 96kV Gapped SiC Arrester     |    0: GAP FLASHES ON AND OFF
C                              |   +1: GAP FLASHES, CLEARS ONCE
C             <--REFER -->     V
C <-BUS1<-BUS2<-BUS3<-BUS4<FLASH
92  AR1A                                4444.                                   4
C .....^.....^.....^.....^.....^.......4444.....................................O
C
C ------------------RLIN<------------------VFLASH<------------------VZERO
                     0.0                  218000.
C .....................^........................^........................^
C
C ---------------CURRENT<------------------VOLTAGE
                  1500.                   154000.
                  3000.                   173000.
                  5000.                   188000.
                 10000.                   213000.
                 20000.                   247000.
                 40000.                   296000.
C .....................^........................^
                  9999.
C <-BUS1<-BUS2<-BUS3<-BUS4<FLASH
92  AR1B        AR1A                    4444.                                   4
92  AR1C        AR1A                    4444.                                   4
C .....^.....^.....^.....^.............4444.....................................O
```

Important System Variables

- Source Characteristic:

  Transient magnitudes are generally reduced by stronger sources and/or more lines at the substation.

- Switched Capacitor Bank Size:

  Varying the switched capacitor bank size changes the energizing frequency (and magnitude) and therefore the phase-to-phase transients.

Important System Variables - cont

- Radial Line Length:

  Line length is important because it determines the travel time of the travelling wave and therefore has a significant impact on the magnitude of the phase-to-phase transient.

- Transformer Location Along the Line:

  Generally the highest transient voltages will occur at the line termination, however significant voltages may occur at any point on the line.

Transmission and Distribution *Volume 3, Slide 66*

Important System Variables - cont

- Surge Arresters:

  Arresters located at the transformer location can help reduce the phase-to-phase transients. Usually these arresters are connected phase-to-ground and therefore limit the phase-to-phase voltage to twice the arrester protective level.

Example Phase-to-Phase Waveforms

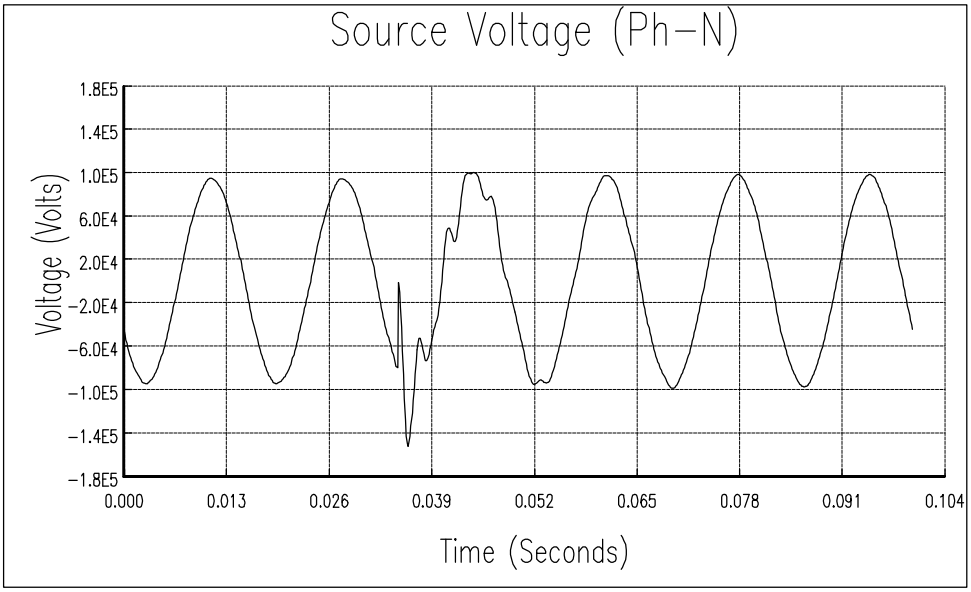

Simulated Waveforms - cont

- 115kV bus voltage, during energization of the 54MVAr capacitor bank:

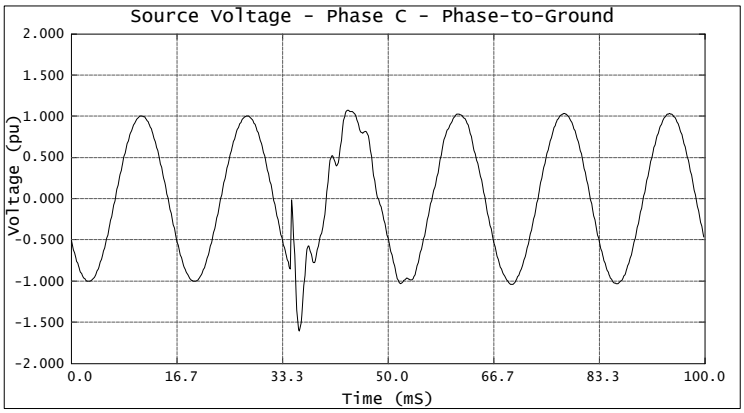

Note: $1\text{pu} = 115\text{kV} * \frac{\sqrt{2}}{\sqrt{3}}$

Simulated Waveforms - cont

- Transformer primary (phase-to-ground) voltage, during energization of the 54MVAr capacitor bank (with 90kV MOV at terminal):

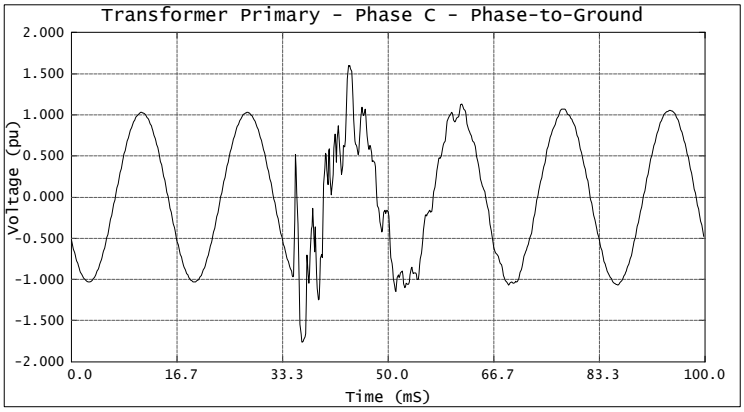

Simulated Waveforms - cont

- Transformer primary (phase-to-phase) voltage, during energization of the 54MVAr capacitor bank (with 90kV MOV at terminal):

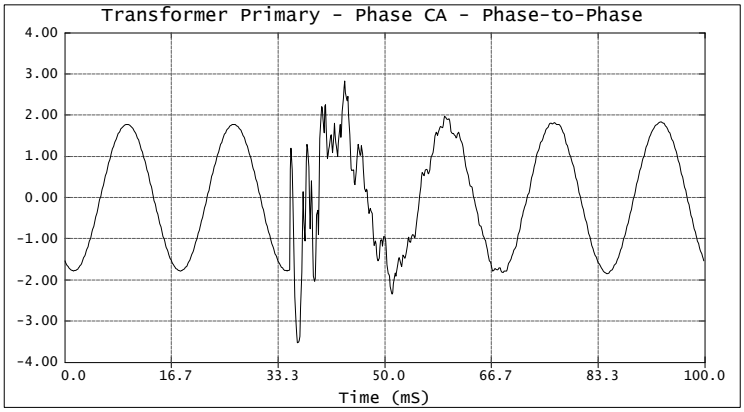

Simulated Waveforms - cont

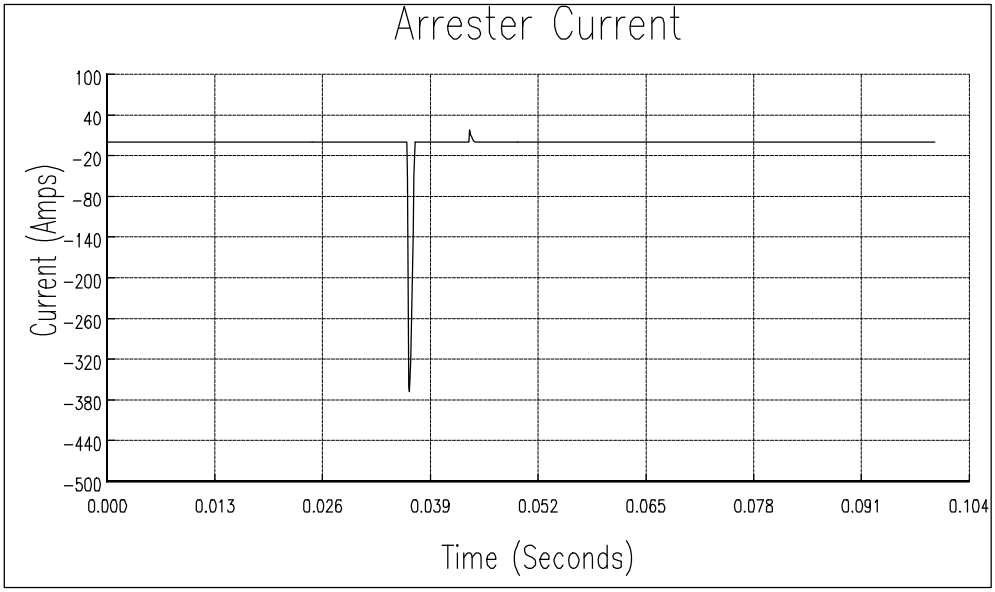

Simulated Waveforms - cont

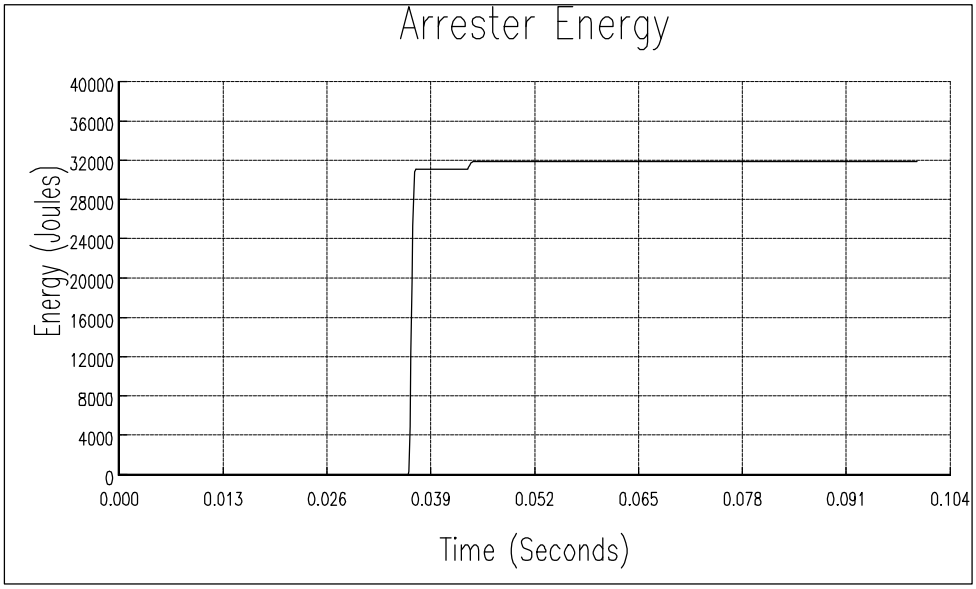

Transmission and Distribution *Volume 3, Slide 73*

Distribution and Power Quality Applications

- Overview
  - System modeling techniques / suggested study procedure
  - Developing a system model / accuracy / reduction / verification
  - System study factors / time step / simulation time
- Component Models:
  - Linear elements / capacitors / loads / feeders / transformers / etc.
  - Non-linear elements / arresters / transformer saturation
  - Switches / sources / motors
- Example Studies/Cases:
  - Capacitor switching / back-to-back switching / restrike
  - Transformer energizing / ferroresonance
  - Harmonic evaluations / linear resonance / load representation
  - Voltage variations / motor starting

Transmission and Distribution *Volume 3, Slide 74*

Electric utilities are responding to the concern for power quality by creating expertise within the organization to help customers evaluate power quality requirements, and develop solutions to problems that develop. One of the most important needs is an understanding of the actual power quality provided to customers. This information is often not available because conventional system monitoring and analysis have focused on reliability and steady-state voltages and currents, rather than on the full spectrum of power quality variations that impact customer equipment.

This lecture is designed to provide assistance in expanding the distribution system modeling and analysis capabilities to include a significant number of power quality concerns that may impact customers. These concerns range from very fast transient voltages to disturbances caused by remote system faults to harmonic distortion levels resulting from customers with nonlinear loads. This wide range of power quality concerns results in special requirements for monitoring equipment and software, and creates a need for sophisticated software to analyze these power system events.

Power Quality Assessment:

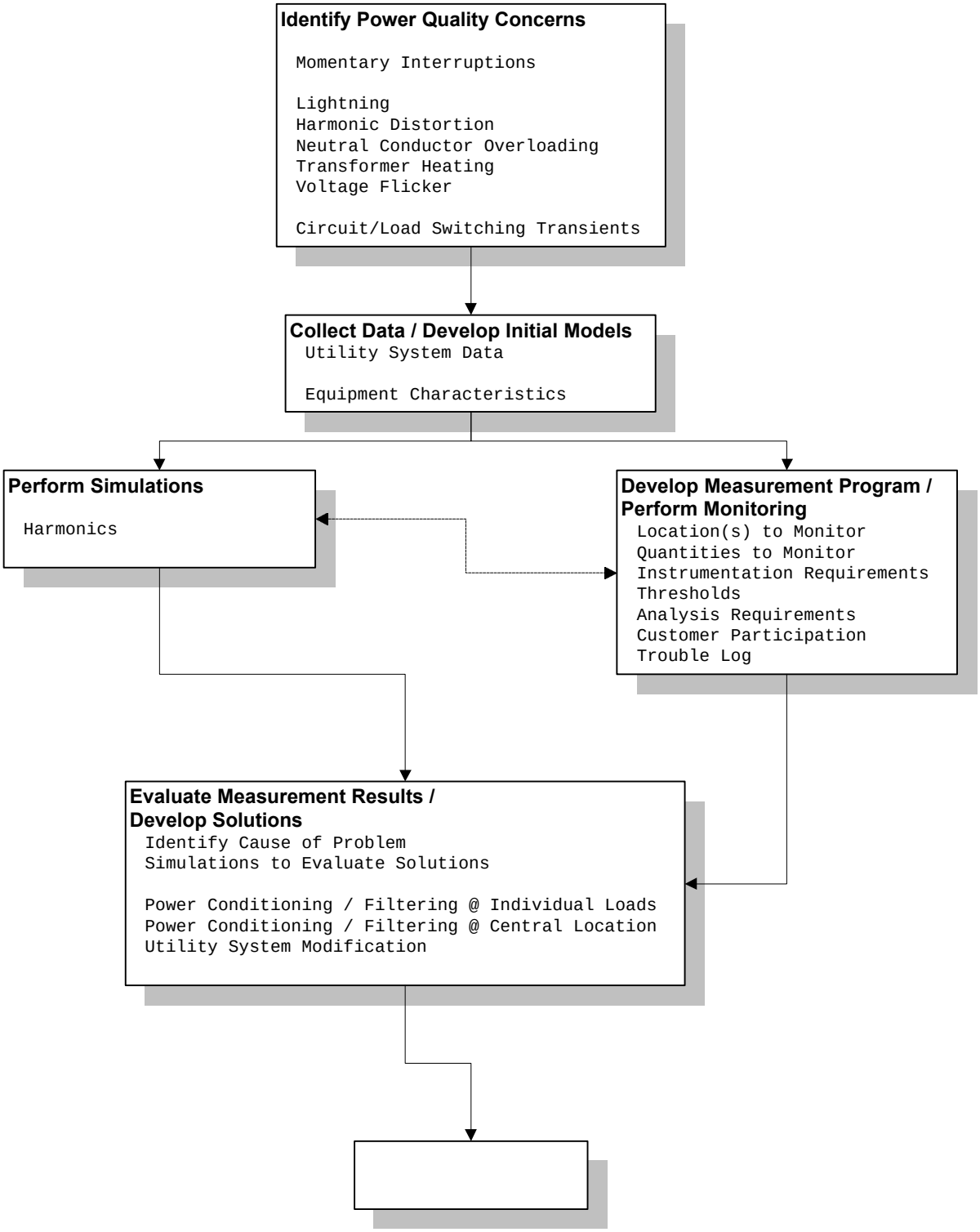

Transient Concerns

- Transients due to normal switching operations
  - Capacitor bank energizing
  - Voltage magnification
  - Line/cable closing & opening
  - Transformer energizing (inrush) $ de-energizing (oscillation)
  -
- Transients due to faults and reclosing
  - Fault initiation and clearing
  - Current limiting fuse operation
  -
- Transients related to motors and drives
  - Induction motor starting
  - Drive tripping due to sags and capacitor switching transients

Transmission and Distribution *Volume 3, Slide 76*

Transient Concerns - cont

- Ferroresonance and dynamic transients
  - Resonance excited by an unbalanced operation
  - Dynamic overvoltage due to transformer inrush
- Power line interference with controls and communication
- Lightning surges
  - Wave propagation
  - Impact of grounding
  - Secondary current surge

System Conditions

- System configuration
  - Radial, network, or loops
  - Source strength
  - Capacitor bank size / location / switching practices
  - Load type / level / location
- System operation / protection
  - Relay protection schemes
    - Philosophy
    - Reclosing practices
    - Load transferring

Transmission and Distribution *Volume 3, Slide 78*

Estimation of Dominant Frequency

- High frequency transients:
  - Lightning
  - Short cable / line operation
- Median Frequency:
  - Capacitor bank switching
  - Linear resonance (harmonics)
  - Solid-state equipment operation
- Low frequency:
  - Voltage sags
  - Motor / system interaction
  - Ferroresonance

Transmission and Distribution *Volume 3, Slide 79*

High Frequency Simulation

- Feeder section model for a high frequency simulation (lightning study)

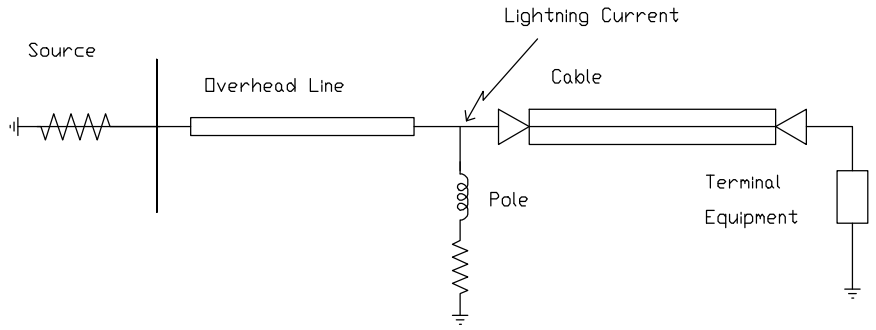

Median Frequency Simulation

- Distribution feeder model for median frequency simulation
  - Capacitor switching studies
  - Harmonic studies

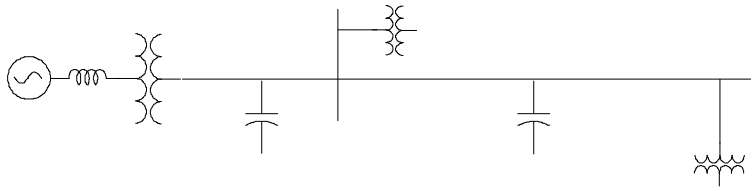

Transmission and Distribution *Volume 3, Slide 81*

It is important to note that the representation of a power system element may change drastically, depending on the frequency content of the transient event. For example, a transformer model may begin as simple resistive/inductive elements for low frequency events (faults) and progress to simple capacitive elements for high frequency events (lightning). Extreme care should be taken to represent each element as accurately as possible.

Modeling Factors

- Supply MVA / load MVA
- System frequency response
- Step-down transformer connections
- Equipment and system grounding
- Characteristic of distribution feeder
- Capacitor bank size / location / connection / control
- Protective devices - location and characteristic
- Overhead / underground
- Switching device characteristic

Transmission and Distribution *Volume 3, Slide 82*

Modeling Accuracy

- High accuracy is required for:
  - Comparison with measured quantity
  - Failure analysis
- Conservative approach (reasonable results) is acceptable for:
  - Insulation coordination
  - Device duty evaluation
  - Parametric study for a general trend
- Accuracy is less important for:
  - Typical waveform generation
  - Phenomena illustration

Transmission and Distribution *Volume 3, Slide 83*

System Simplification

- Simplification is always required:
  - Model development and simulation time
  - Requirement of simulation program (i.e. # buses, etc.)
- Simplification without loss of accuracy:
  - Define the problem well
  - Start with a simple model
  - Use equivalents to represent less important portions of the system
  - Verify model after each step and increase size only when necessary

Time Step Considerations

- Δt and Tmax Selection:
  - Selected according to:
    - Type of phenomenon
    - Highest and lowest frequencies of interest
    - Dominant frequency
  - Hard Limit
    - Δt < the wave travel time of the shortest distributed line section
  - Recommendation
    - 10 - 20 points for a dominant frequency cycle for switching transient
    - 1/10 of the front time for an impulse type transient

Transmission and Distribution *Volume 3, Slide 85*

Model Verification

- Verify the model at each stage during step-by-step model development
- Check against utility short-circuit calculations for both a single-line-to-ground fault and a balance three-phase-fault
- Re-run the case with half of the step size
- Compare with field measurements whenever possible
- Do the results of the simulation make sense

Transmission and Distribution *Volume 3, Slide 86*

Lab Exercises - DISTPQ96.DAT

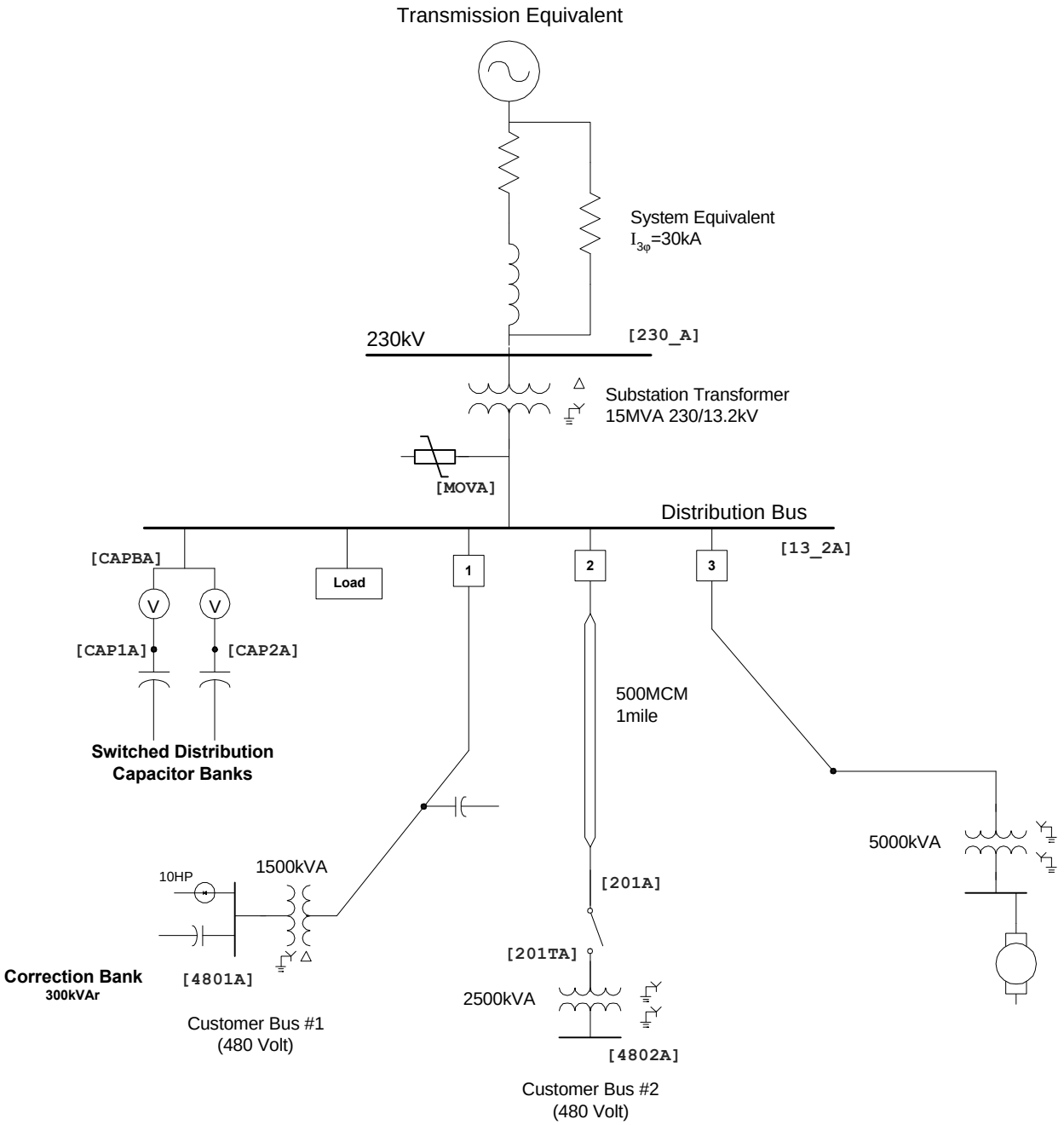

Distribution Feeders

Component Representation

- Line / cable representation:
  - A single pi or multi-pi (cascade) representation for median frequency simulation such as capacitor switching or line energization representing the lines not being directly connected with the switched line.
  - A lumped impedance representation for a short line or low frequency phenomenon simulation such as a fault or a short-circuit calculation

Component Representation - cont

- Line / cable representation - continued:
  - A distributed parameter, frequency dependent line representation for the operated line when high modeling accuracy is required.
  - A distributed parameter, frequency dependent cable model for pipe-type cable system transient studies when high accuracy is needed.
  - A distributed constant parameter line representation for most lightning propagation studies.

Component Representation - cont

- Transformer representation:
  - For high frequency simulation, “distributed” winding parameters and all winding-to-winding and winding-to-ground capacitances need to be considered. However, the core saturation can be ignored.
  - For median frequency simulation, the winding parameters can be lumped. The winding-to-winding capacitance can be ignored. The winding-to-ground capacitance and core saturation effect may need to be included if high accuracy is required.

Component Representation - cont

- Transformer representation - continued:
  - For low frequency simulation, such as 60Hz power frequency phenomenon, all capacitances can be ignored. The core saturation must be included when the event to be simulated involving a transformer energization/deenergization, dynamic overvoltage, or ferroresonance. It is not needed for a voltage sag or fault study.

Component Representation - cont

- Load representation:
  - Distributed feeder loads can be represented by several lumped loads along the feeder.
  - For most transients, assuming unchanged loads is acceptable.
  - Generally, the feeder load can be represented by a passive circuit block consisting of an inductance in series with the parallel of a resistance and a inductance. Selection of each element value depends on the load type, kVA and power factor.
  - Directly connected induction motor loads need to be represented by UM model in a feeder voltage sag study to include the system and motor interaction.

Component Representation - cont

- dc drive representation - constant current source

```
C  Harmonic Current Source for 200 HP DC Drive
C  IFL = 240 Amps  I5 = 33.6%, I7 = 1.6%,  I11 = 8.7%,  I13 = 1.2%
C
C <--Bus<I<-----Ampl<-----Freq<----Phase<-------A1<------T1><---Tstart<----Tstop
14 200HP-1     339.4      60.0     -75.0                      50.0E-06      9999
C .....^.^.........^.........^.........^.........^........^..........^.........^
14 200HP-1     114.0     300.0     156.0                      50.0E-06      9999
C .....^.^.........^.........^.........^.........^........^..........^.........^
14 200HP-1       5.4     420.0      29.0                      50.0E-06      9999
C .....^.^.........^.........^.........^.........^........^..........^.........^
14 200HP-1      29.5     660.0      49.0                      50.0E-06      9999
C .....^.^.........^.........^.........^.........^........^..........^.........^
14 200HP-1       4.1     780.0      54.0                      50.0E-06      9999
C .....^.^.........^.........^.........^.........^........^..........^.........^
14 200HP-1      15.3    1020.0     -57.0                      50.0E-06      9999
C .....^.^.........^.........^.........^.........^........^..........^.........^
14 200HP-1       4.4    1140.0     -46.0                      50.0E-06      9999
C .....^.^.........^.........^.........^.........^........^..........^.........^
14 200HP-1       9.5    1380.0    -163.0                      50.0E-06      9999
C .....^.^.........^.........^.........^.........^........^..........^.........^
14 200HP-1       4.1    1500.0    -149.0                      50.0E-06      9999
C .....^.^.........^.........^.........^.........^........^..........^.........^
```


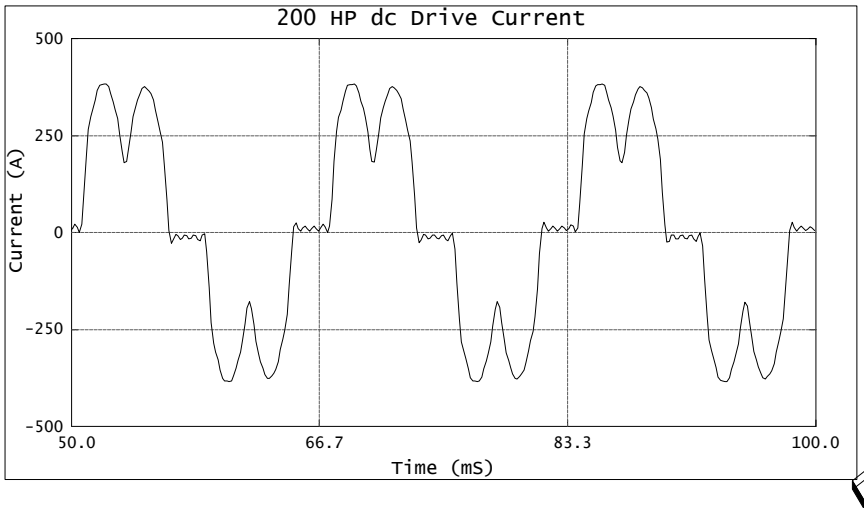

230kV Source Equivalent

Mutually Coupled R-L Branch:

```
C <-------- 230kV Source Equivalent
C           Z1 = 0.135 + j 0.845 % @ 100 MVA I3P = 30kA, IPG = 32.5kA
C           Z0 = 0.105 + j 0.640 % @ 100 MVA
C
/BRANCH
C <---Nodes--><----------><-ohms<---------mH
C <-Bus1<-Bus2<----------><----R<----------L
51  SRCA 230_A            0.555       8.981
C .....^.....^           .....^...........^  Zero Sequence
52  SRCB 230_B            0.713      11.857
C .....^.....^           .....^...........^  Positive Sequence
53  SRCC 230_C
C .....^.....^
C
C
C <-------- 230kV Surge Impedance
C           200 ohms (two 230kV transmission lines @ 400 ohms each)
C
C <---Nodes--><---Refer--><-ohms<---mH<---uF<-------------------------------Out
C <-Bus1<-Bus2<-Bus3<-Bus4<----R<----L<----C                                V
    SRCA 230_A            200.0
    SRCB 230_B            200.0
    SRCC 230_C            200.0
C .....^.....^.....^.....^.....^.....^.....^.....................................^
```

Rule Book: 6.3.3

$$I_{3\phi} = \frac{1}{Z_1} \qquad I_{\phi G} = \frac{3}{2Z_1 + Z_0} \qquad Z_{base} = \frac{kV_{\phi\phi}^{\ 2}}{MVA_{3\phi}}$$

Source Impedance Data - EMTP RL-Circuit Format

Voltage:	230	kV	From Bus:	SRC1x		To Bus:	230_x	
Sys Freq:	60	Hz						
	R	X		R	X			
Z1:	0.135	0.845	Z0:	0.105	0.640	% @	100	MVA
							529	Ω
	R	L		R	L		251.0	A
Z1:	0.713	11.857	Z0:	0.555	8.981		Ω & mH	
I3P:	29335.8	-80.94	IPG:	31910.6	-80.87		A	

230kV Voltage Source

```
C <-------- 230kV Voltage Source
C           103% voltage (peak line-to-ground voltage)
/SOURCE
C BUS-->><I<AMPLITUDE<FREQUENCY<--TOIPHIO<-------A1<------T1><---TSTART<----TSTOP
14  SRCA    193428.0      60.0         0                          -1.0      9999
14  SRCB    193428.0      60.0      -120                          -1.0      9999
14  SRCC    193428.0      60.0       120                          -1.0      9999
C .....^.^.........^.........^.........^.........^........^..........^.........^
```

Node Voltage or Injected Current:

Type 11: Step Function
Type 14: Cosine Function (peak value)

Type:
0: Voltage Source
-1: Current Source

Rule Book: 10.3

EMTP sources include both rotating machines and voltage sources behind equivalent source impedances. Typically, unless the user is concerned about machine dynamics, the equivalent source representation is sufficient for distribution system / power quality investigations. EMTP provides the capability to model the 60 Hz equivalent impedance though its mutually-coupled R-L branch element. This element consists of the positive and zero sequence impedance, and is identified by a 51, 52, 53 type code.

230/13.2kV Substation Transformer

230/13.2 kV, 15 MVA Delta/Wye-Gnd, Z_{tx} = 0.765 + j7.65 % @ 15 MVA

EMTP Saturable Transformer Model:

2 Winding Transformer - Delta / Wye-Gnd

High Side kV	Low Side kV	Xfmr MVA	R1 % @ MVA	X1 % @ MVA	HS Base	LS Base
230.00	13.2	15	0.765	7.650	10580.0	11.616

R - HS W	L - HS mH	R - LS W	L - LS mH	V - HS kV	V - LS kV
40.4685	1073.460	0.0444	1.179	230.00	7.621

R1 % @ 100	X1 % @ 100
5.10	15.36

Assumed X/R = 10

System Frequency: 60

$$Z_{base_{hs}} = \frac{230^2}{\left(15/3\right)} = 10580\Omega \qquad Z_{base_{ls}} = \frac{\left(13.2/\sqrt{3}\right)^2}{\left(15/3\right)} = 11.62\Omega$$

$$R_{hs} = \frac{0.765\%}{2} * 10580 = 40.47\Omega \qquad R_{ls} = 0.044\Omega$$

$$L_{hs} = \frac{\left(\frac{7.65\%}{2} * 10580\right)}{2\pi 60} = 1073.5\text{mH} \qquad L_{ls} = 1.18\text{mH}$$

230/13.2kV Substation Transformer

```
/BRANCH
C Transformer-<--Ref<---><--Iss<--Phi<-Name<-Rmag
  TRANSFORMER                           ST1A
C ...........^.....^      .....^.....^.....^.....^
            9999
C <---Nodes--><----------><-ohms<---mH<---kV
C <-Bus1<-Bus2<--Ignore--><----R<----L<-volt<---------------------------------O
01 230_A 230_B             40.47 1073. 230.0
02 13_2A                   0.044 1.179  7.62
C .....^.....^            .....^.....^.....^                                 ^
C Transformer-<--Ref<---><--Iss<--Phi<-Name<-Rmag
  TRANSFORMER   ST1A                    ST1B
C ...........^.....^      .....^.....^.....^.....^
C <---Nodes--><----------><-ohms<---mH<---kV
C <-Bus1<-Bus2<--Ignore--><----R<----L<-volt<---------------------------------O
01 230_B 230_C
02 13_2B
C .....^.....^            .....^.....^.....^                                 ^
C Transformer-<--Ref<---><--Iss<--Phi<-Name<-Rmag
  TRANSFORMER   ST1A                    ST1C
C ...........^.....^      .....^.....^.....^.....^
C <---Nodes--><----------><-ohms<---mH<---kV
C <-Bus1<-Bus2<--Ignore--><----R<----L<-volt<---------------------------------O
01 230_C 230_A
02 13_2C
C .....^.....^            .....^.....^.....^
```


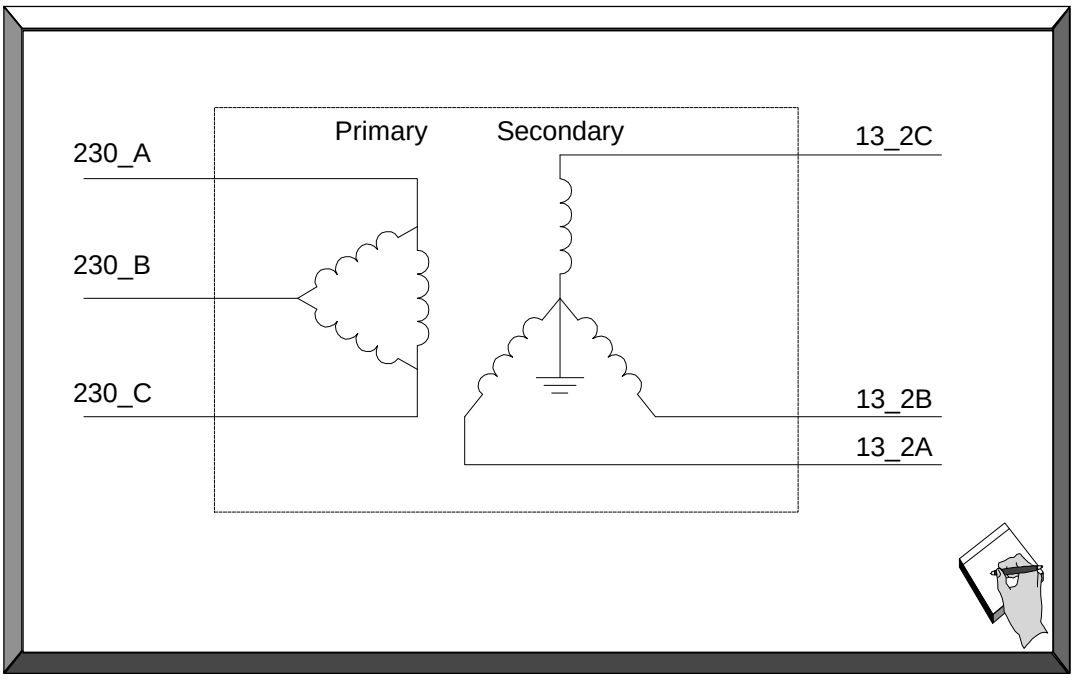

Modeling the Step-down Transformer

Circuit #1

```
C <-------- Customer #1 Stepdown Transformer
C           1500kVA, 13.2kV/480 V, DY, Ztx=6%, X/R=10
C
C Transformer-<--Ref<---><--Iss<--Phi<-Name<-Rmag
  TRANSFORMER                        CTX1A
C ...........^.....^      .....^.....^.....^.....^
            9999
C <---Nodes--><----------><-ohms<---mH<---kV
C <-Bus1<-Bus2<--Ignore--><----R<----L<-volt<---------------------------------O
01  102A  102B            1.045 27.73 13.20
02 4801A                  0.001 .0120 0.277
C .....^.....^            .....^.....^.....^                                 ^
C Transformer-<--Ref<---><--Iss<--Phi<-Name<-Rmag
  TRANSFORMER  CTX1A                 CTX1B
C ...........^.....^      .....^.....^.....^.....^
C <-Bus1<-Bus2<--Ignore--><----R<----L<-volt<---------------------------------O
01  102B  102C
02 4801B
C .....^.....^            .....^.....^.....^                                 ^
C Transformer-<--Ref<---><--Iss<--Phi<-Name<-Rmag
  TRANSFORMER  CTX1A                 CTX1C
C ...........^.....^      .....^.....^.....^.....^
C <-Bus1<-Bus2<--Ignore--><----R<----L<-volt<---------------------------------O
01  102C  102A
02 4801C
C .....^.....^            .....^.....^.....^                                 ^
```


EMTP Saturable Transformer Model:

2 Winding Transformer - Delta / Wye-Gnd

High Side kV	Low Side kV	Xfmr MVA	R1 % @ MVA	X1 % @ MVA	HS Base	LS Base
13.20	**0.48**	**1.5**	**0.600**	**6.000**	348.5	0.154

R - HS W	L - HS mH	R - LS W	L - LS mH	V - HS kV	V - LS kV
1.0454	27.731	0.0005	0.012	13.20	0.277

R1 % @ 100	X1 % @ 100
40.00	**15.36**

Assumed X/R = 10

System Frequency: 60

Five-Legged Core Transformer Model

- Five-legged core transformer model:
  - Constructed of four cores fastened together to create five legs
  - Windings are placed around the inner three legs
  - Extensively used for three-phase distribution transformers connected wye-ground / wye-ground

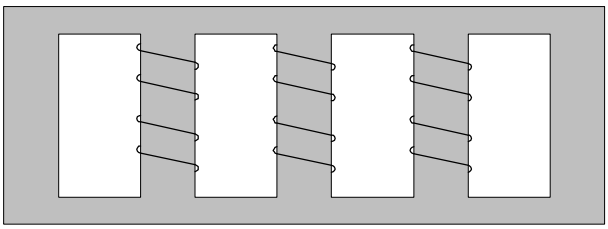

Five-Legged Core Design

Step-down transformers to individual distribution customers served three-phase often employ the five-legged core design. These transformers are generally made of four separate wound or stacked cores, each with half the cross-sectional area required to carry the full flux for each phase. They are arranged as shown above. There is a full core beneath each phase winding, but only a half core between phases (the yokes) and on the outside legs.

Equivalent "TNA" Model

- Five-legged core transformer model:
  - Three-winding "ideal" transformers - using built in saturable transformer model:
    - first winding for the primary (50% impedance in per-unit)
    - second winding for the secondary (50% z in pu)
    - third winding for core (nonlinear inductance) connectivity
  - Magnetic circuit converted to an equivalent electrical network
  - Parallel resistances added to represent core losses

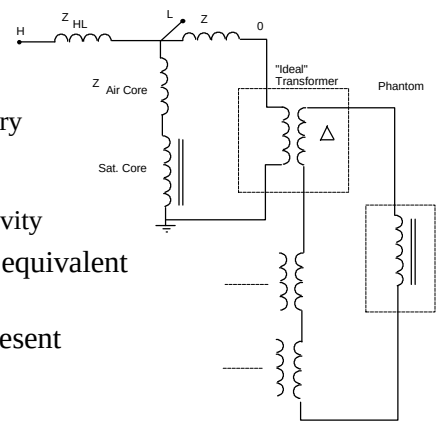

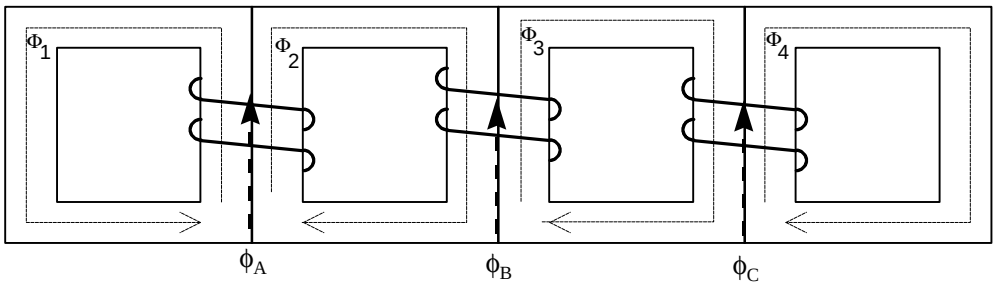

One method for modeling the five-legged core transformer which is straightforward to implement using the EMTP saturable transformer component was presented by Stuehm, Mork, and Mairs. Their model can be deduced by noting that the fluxes labeled 1 - 4 are related to the three phase fluxes (and, hence, the phase voltages) as follows:

$$f_A = f_1 + f_2$$
$$f_B = f_3 - f_2$$
$$f_C = f_4 - f_3$$

Five-Legged Core Data Setup

```
C <-------- Customer #2 Stepdown Transformer
C           2500kVA, 13.2kV/480 V, YY, Ztx=5.5%, X/R=10
C
/BRANCH
C Transformer-<--Ref<---><--Iss<--Phi<-Name<-Rmag
  TRANSFORMER                          CTX2A
C ...........^.....^      .....^.....^.....^.....^
            9999
C <---Nodes--><----------><-ohms<---mH<---kV
C <-Bus1<-Bus2<--Ignore--><----R<----L<-volt<---------------------------------O
01 201TA                   0.192  5.08  7.62
02 4802A                   0.001 0.007 0.277
C .....^.....^            .....^.....^.....^                                 ^
03TERTI1TERTI2             1.E-4 1.E-4  7.62
C .....^.....^            .....^.....^.....^                                 ^
C
...
C [reference branch]
C <---Nodes--><---Refer--><-ohms<---mH<---uF<-------------------------------Out
C <-Bus1<-Bus2<-Bus3<-Bus4<----R<----L<----C                                 V
  TERTI1                                 0.01
  TERTI2                                 0.01
  TERTI3                                 0.01
C .....^.....^.....^.....^.....^.....^.....^.................................^
```

Aux Routine - BCTRAN

- Used for representation of three-phase transformers:
  - three-phase units where $Z_0 \neq Z_1$
  - works for single-phase units as well as any number of windings
  - produces linear model with $[R]$ and $[L]^{-1}$ matrices
  - manufacturer's test report data required:
    - MVA rating
    - winding (kV) ratings / connections
    - positive and zero sequence impedances
    - positive and zero sequence exciting current
    - no load loss watts
    - load loss watts

Transmission and Distribution *Volume 3, Slide 102*

BCTRAN Transformer Setup

```
BEGIN NEW DATA CASE
XFORMER                              44.
C ....................................^
C                                                                      Iprint-
C                                                                      Iput-  |
C                                                                   Itest-  | |
C  - N (Number of Winding per core leg (Col 1-2)                  Nphase-  | | |
C V                                                                        | | | |
C <-----Freq<-----Ipos<-----Spos<-----Lpos<----Izero<----Szero<----Lzero V V V V
C <-------Hz<--------%<------MVA<-------kW<--------%<------MVA<-------kW
 2      60.0     0.450       5.0      8.50     0.450       5.0      8.50 0 2 2-1
C .........^.........^.........^.........^.........^.........^.........^.^.^.^.^
C
C
C k<-------Vk<-------Rk <-Bus1<-Bus2<-Bus3<-Bus4<-Bus5<-Bus6
C V<-------kV<-----Ohmsx<-name<-name<-name<-name<-name<-name
  1      7.62             302A        302B        302C
  2      2.40            4160A       4160B       4160C
C ^.........^.........^x.....^.....^.....^.....^.....^.....^
C                                                        D L
C  k<------Pik<-----Zik+<-----Spos<-----Zik0<----Szero V V
C   <-------kW<--------%<------MVA<--------%<------MVA
 1 2     40.00      6.50       5.0      6.50       5.0 0 1
C .^.........^.........^.........^.........^.........^.^.^
BLANK CARD TO TERMINATE THE SHORT-CIRCUIT TEST DATA
BLANK END OF XFORMER CASES
```

BCTRAN Output

```
C <-------- Customer #3 Stepdown Transformer
$VINTAGE, 1
  USE RB
 1  302A                    .1393545600E+00 .1677532983E+00     Z11
 2 4160A                    .0000000000E+00-.5326167220E+00     Z12
                            .1382400000E-01 .1691512597E+01     Z22
 3  302B                    .0000000000E+00 .0000000000E+00     Z13
                            .0000000000E+00 .0000000000E+00     Z23
                            .1393545600E+00 .1677532983E+00     Z33
 4 4160B                    .0000000000E+00 .0000000000E+00     M11
                            .0000000000E+00 .0000000000E+00     M12
                            .0000000000E+00-.5326167220E+00     M13
                            .1382400000E-01 .1691512597E+01     Z11
 5  302C                    .0000000000E+00 .0000000000E+00     M12
                            .0000000000E+00 .0000000000E+00     M22
                            .0000000000E+00 .0000000000E+00     M23
                            .0000000000E+00 .0000000000E+00     Z12
                            .1393545600E+00 .1677532983E+00     Z22
 6 4160C                    .0000000000E+00 .0000000000E+00     M13
                            .0000000000E+00 .0000000000E+00     M23
                            .0000000000E+00 .0000000000E+00     M33
                            .0000000000E+00 .0000000000E+00     Z13
                            .0000000000E+00-.5326167220E+00     Z23
                            .1382400000E-01 .1691512597E+01     Z33
  USE RL
$VINTAGE, 0
```

leg I

leg II

Zik = coupling between windings on one leg (including self impedance Zii)

Mik = coupling between windings on different legs

Review - Type 98 Element

- Pseudononlinear Inductor (Type 98):
  - Values of flux-current curve determined using CONVERT

```
C 230kV/34.5kV, 18MVA Distribution Transformer Saturation Characteristic
C Ie = 0.14% @ 100% V
C Ie = 0.24% @ 110% V
C Ie = 1.20% @ 115% V
C
C  <-Nodes--><---Refer--->
C <-Bus1<-Bus2<-Bus3<-Bus4<-Iss<-Phiss<----------------------------------OUTPUT
98 TXL_A                  0.596  74.7                                        1
C .....^.....^.....^.....^.....^.....^.........................................^
C
C <------Current<-----------Flux
   .59635512E+00   .74726254E+02
   .15130298E+01   .82198880E+02
   .10884420E+02   .85935192E+02
C ............^...............^
            9999
C
```

result of AUX routine - CONVERT

Input data preparation for the pseudononlinear reactor requires converting the manufacturer's rms saturation (voltage-current) curve into a corresponding peak flux-current characteristic. This conversion is performed using the auxiliary routine CONVERT.

$$I_{ss} = I_{e_{(100\%\,V)}} * I_{FL} \qquad \Psi_{ss} = \frac{V_{pk}}{\omega}$$

$$I_{ss} = 0.14\% * \left(\frac{18\text{MVA}}{\sqrt{3} * 34.5\text{kV}} \right) = 0.422\text{A}_{rms} = 0.596\text{A}_{pk}$$

$$\Psi_{ss} = \frac{34.5\text{kV} * \left(\sqrt{2} / \sqrt{3} \right)}{\omega} = 74.72\text{V} - \text{sec}$$

Type 98 - Concern for Discontinuity

- Steady-State --> Time Step Loop Discontinuity:
  - Steady-state solution uses: $L_{ss} = \frac{\Psi_{ss}}{I_{ss}}$
  - If initial condition is not on characteristic, there will be a discontinuity at the first time step
  - Results in spurious voltage transient:

$$V = L_s \frac{\Delta i}{\Delta t}$$

  - Solution - shift the time reference (phase angles) so initial flux does not exceed 0.866 x its peak value

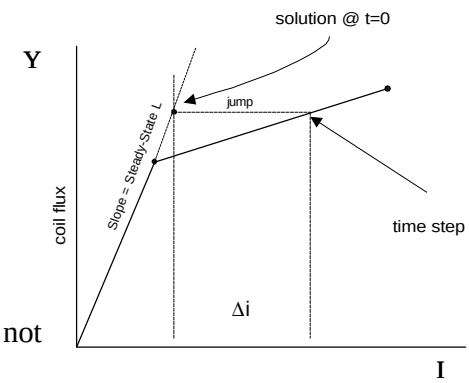

Although the built-in saturable transformer model has the ability to model the saturation characteristic, it is often added using a separate nonlinear element (this is required with the matrix models). The EMTP provides the capability to separately model the saturation characteristic by utilizing the pseudononlinear reactor (Type 98). This branch is typically connected across the winding closest to the core, which is usually the low voltage winding. The core losses are represented by adding a parallel linear resistance, or by a more complicated circuit which accounts for the frequency dependence of the losses.

Possible problems with this model may occur as the program shifts from the steady-state characteristic to the user-defined nonlinear characteristic at the first time step. Referring to the figure above, if the initial condition point does not lie on the characteristic, there will be a discontinuity which may produce spurious transients immediately after time zero. The user should check the initial flux in the Type 98 pseudononlinear reactor when this problem occurs.

Transformer (No Load) Losses

```
C <-------- Customer #2 Stepdown Transformer
C           No Load Loss Watts = 5kW
C
C [no load loss watts]
C <---Nodes--><---Refer--><-ohms<---mH<---uF<--------------------------------Out
C <-Bus1<-Bus2<-Bus3<-Bus4<----R<----L<----C                                  V
  TERTI1TERTI2            34848.
  TERTI2TERTI3            34848.
  TERTI3NEUTRL            34848.
C .....^.....^.....^.....^.....^.....^.....^.....................................^
```

$$R_{(\text{noloadloss})} = \frac{kV^2{}_{\text{winding}}}{MVA_{1\phi}} = \frac{7.621^2}{\left(0.005/3\right)} = 34848\Omega$$

```
C
C [reference]
C <---Nodes--><---Refer--><-ohms<---mH<---uF<--------------------------------Out
C <-Bus1<-Bus2<-Bus3<-Bus4<----R<----L<----C                                  V
   4802A                                 1.00
   4802B                                 1.00
   4801C                                 1.00
C .....^.....^.....^.....^.....^.....^.....^.....................................^
```



```
C 230kV/13.2kV, 5MVA Transformer Saturation Characteristic
C No Load Loss = 18.3kW
C Ie = 0.14% @ 100% V
C Ie = 0.24% @ 110% V
C Ie = 1.20% @ 115% V
C
/BRANCH
C  <-Nodes--><---Refer--->
C <-Bus1<-Bus2<-Bus3<-Bus4<-Iss<-Phiss<----------------------------------OUTPUT
98 13_2A                  1.298 28.59                                        3
C .....^.....^.....^.....^.....^.....^.........................................^
C
C <------Current<-----------Flux
   .12989758E+01   .28588794E+02
   .32956691E+01   .31447674E+02
   .23708354E+02   .32877114E+02
C .............^...............^
            9999
C
C <---Nodes--><---Refer--><-ohms<---mH<---uF<--------------------------------Out
C <-Bus1<-Bus2<-Bus3<-Bus4<----R<----L<----C                                  V
   13_2A                  9521.3
C .....^.....^.....^.....^.....^.....^.....^.....................................^
.
.
. (repeated for phases B and C)
```

Alternate Method - Hysteresis Model

Type 96 Setup:

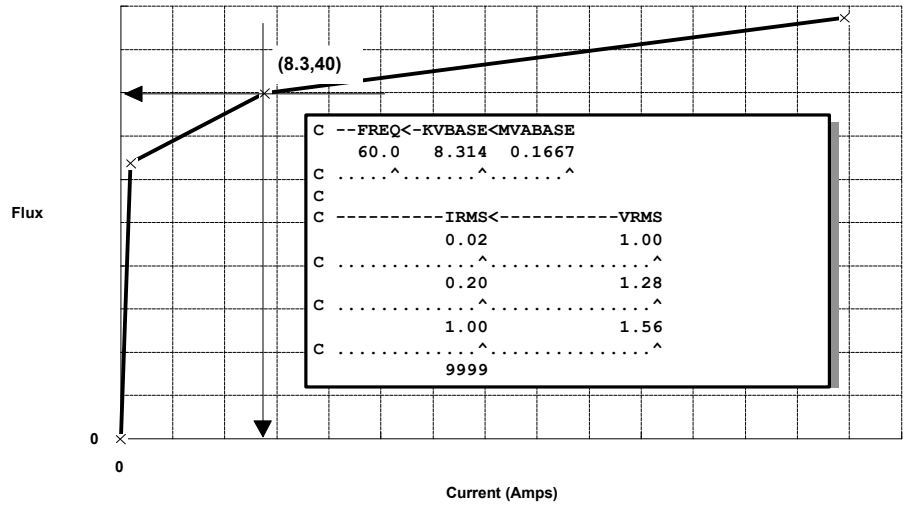

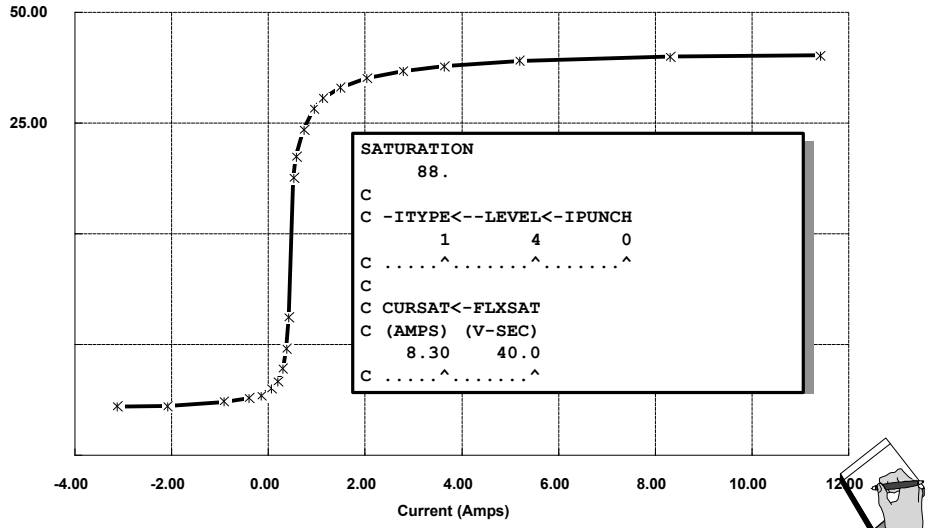

Distribution System Feeder Modeling

Circuit #1

```
C <-------- Circuit #1  13.2kV Feeder - from substation to node 100
C
/SWITCH
C [circuit #1 breaker (normally closed]
C Bus1->Bus2-><---Tclose<----Topen<-------Ie<---Vflash<--Request<-----Target<--O
   13_2A CKT1A -10.00E-3 999.9E-03                                              1
   13_2B CKT1B -10.00E-3 999.9E-03                                              1
   13_2C CKT1C -10.00E-3 999.9E-03                                              1
C .....^.....^.........^.........^.........^.........^.........^...........^...^
C
/BRANCH
C <---Nodes--><---Refer--><-Ohms<---------mH
C <-Bus1<-Bus2<-Bus3<-Bus4<----R<----------L
51 CKT1A  100A            0.7743     11.5745
52 CKT1B  100B            0.2654      2.6081
53 CKT1C  100C
C .....^.....^xxxxxxxxxxxx.....^...........^
```

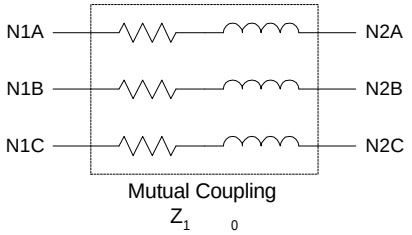

Distribution Circuit Line Data - EMTP Mutually-Coupled RL Format

Voltage: **13.2** kV From Bus: **CKT1x** To Bus: **100x**
Sys Freq: **60** Hz
Base: **100.0** MVA Base Impedance: **1.7424** Ω

	R1	X1	R0	X0		
Line Impedance (from bus):	**0.0100**	**0.3200**	**0.0100**	**0.8400**	pu @	100 MVA
Line Impedance (to bus):	**0.1943**	**1.0028**	**0.5477**	**3.8702**	pu @	100 MVA

	R1	X1	R0	X0		
Section Impedance:	**0.1843**	**0.6828**	**0.5377**	**3.0302**	pu @	100 MVA

	R1	L1	R0	L0		
Section Impedance:	**0.3211**	**3.1558**	**0.9369**	**14.0052**	I3P:	4282 A
	Ω	Ω	mH	mH	IPG:	2205 A

Distribution System Feeder Modeling

Circuit #2 - Cable

```
C <-------- 500MCM 175mil XLP
C           R1=0.0680ohms/1000ft, X1=0.0674ohms/1000ft
C           R0=0.1653ohms/1000ft, X0=0.0428ohms/1000ft
C           C1=500nF/mi, C0=475nF/mi
/BRANCH
C [1 mile cable section]
C <---Nodes--><---Refer--><-ohms<---mH<---uF<-------------------------------Out
C <-Bus1<-Bus2<-Bus3<-Bus4<----R<----L<----C                                 V
    200A                                0.25
    200B                                0.25
    200C                                0.25
C .....^.....^.....^.....^.....^.....^.....^.................................^
C
C <---Nodes--><---Refer--><-Ohms<---------mH
C <-Bus1<-Bus2<-Bus3<-Bus4<----R<----------L
51  200A  201A            0.8728      2.3151
52  200B  201B            0.3590      0.9439
53  200C  201C
C .....^.....^xxxxxxxxxxxx.....^...........^
C
C <---Nodes--><---Refer--><-ohms<---mH<---uF<-------------------------------Out
C <-Bus1<-Bus2<-Bus3<-Bus4<----R<----L<----C                                 V
    201A                                0.25
    201B                                0.25
    201C                                0.25
C .....^.....^.....^.....^.....^.....^.....^.................................^
```


Distribution Feeder Data - EMTP PI-Circuit Format

Voltage: 13.2 kV From Bus: CKT2x To Bus: 201x
Sys Freq: 60 Hz
Length: 1.00 miles Number of PI Sections: 1 1 mi/section

	R1	X1	R0	X0		
Cable Impedance:	0.0680	0.0674	0.1653	0.0428	Ω	/1000 FT
(500 MCM 175mil XLP)		0.1788 mH/1000'		0.1135 mH/1000'		

	R1	X1	R0	X0		
Total Cable Impedance:	0.3590	0.3559	0.8728	0.2260	Ω	
	20.6061	20.4242	50.0909	12.9697	% @	100 MVA
		0.9440 mH		0.5994 mH		1.7424 Ω

	C1		C0/C1	C0	
Capacitive Reactance:	500.0	nF/mi	0.95	475.0	nF/mi
	5305.2	Ω/mi		5584.4	Ω/mi
Total Cable Capacitance:	0.5000	µF		0.4750	µF

	Z1		Z0	
Cable Surge Impedance:	43.5	Ω	35.5	Ω

	R1	R0	L1	L0	(C1)/2	(C0)/2
Total Cable Impedance:	0.3590	0.8728	0.9440	2.3151	0.2500	0.2375
(R-L + 0.5 C):	Ω	Ω	mH	mH	µF	µF

	R11	R21	L11	L21	C11	C21
Total Cable Impedance:	0.5303	0.1712	0.8291	-0.1148	0.4917	-0.0083
	Ω	Ω	mH	mH	µF	µF

	R11	R21	L11	L21	C11	C21
PI Section Impedance:	0.5303	0.1712	0.8291	-0.1148	0.4917	-0.0083
	Ω	Ω	mH	mH	µF	µF

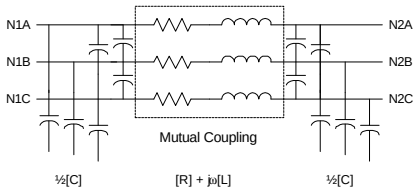

Alternate Method

```
C 230 kV, 100 mile Transmission Line
C Z1 = 1.72 + j14.33 % @ 100 MVA
C Z0 = 11.9 + j42.53 % @ 100 MVA
C Line Charging MVAr = 30 (assume C0 = 0.6C1)
C
C <---Nodes--><---Refer--><-Ohms<---mH<---uF
C <-Bus1<-Bus2<-Bus3<-Bus4<--R11<--L11<--C11
 1 SEN_A REC_A             27.05 332.9 1.304
C .....^.....^.....^.....^.....^.....^.....^
C <-Bus1<-Bus2<----------><--R21<--L21<--C21<--R22<--L22<--C22
 2 SEN_B REC_B             17.95 131.9 -.201 27.05 332.9 1.304
C .....^.....^xxxxxxxxxxxx.....^.....^.....^.....^.....^.....^
C <-Bus1<-Bus2<----------><--R31<--L31<--C31<--R32<--L32<--C32<--R33<--L33<--C33
 3 SEN_C REC_C             17.95 131.9 -.201 17.95 131.9 -.201 27.05 332.9 1.304
C .....^.....^xxxxxxxxxxxx.....^.....^.....^.....^.....^.....^.....^.....^.....^
```

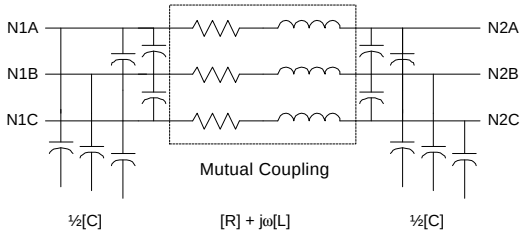

$$Z_{11} = Z_{22} = Z_{33} = \frac{1}{3}\left(Z_0 + 2Z_1\right)$$

$$Z_{12} = Z_{13} = Z_{23} = \frac{1}{3}\left(Z_0 - Z_1\right)$$

Distribution System Feeder Modeling

```
C <-------- Circuit #3  13.2kV Feeder - from substation to node 300
C
/SWITCH
C [circuit #3 breaker (normally closed]
C Bus1->Bus2-><---Tclose<----Topen<-------Ie<---Vflash<--Request<-----Target<--O
   13_2A CKT3A -10.00E-3 999.9E-03                                              1
   13_2B CKT3B -10.00E-3 999.9E-03                                              1
   13_2C CKT3C -10.00E-3 999.9E-03                                              1
C .....^.....^.........^.........^.........^.........^.........^...........^...^
C
/BRANCH
C <---Nodes--><---Refer--><-Ohms<---------mH
C <-Bus1<-Bus2<-Bus3<-Bus4<----R<----------L
51 CKT3A  300A            0.5532      9.3427
52 CKT3B  300B            0.2103      2.1428
53 CKT3C  300C
C .....^.....^xxxxxxxxxxxx.....^...........^
C
C <-------- Circuit #3  13.2kV Feeder - from node 300 to node 301
C
C <---Nodes--><---Refer--><-Ohms<---------mH
C <-Bus1<-Bus2<-Bus3<-Bus4<----R<----------L
51  300A  301A            0.3247      1.4291
52  300B  301B            0.1492      0.5683
53  300C  301C
C .....^.....^xxxxxxxxxxxx.....^...........^
```

Circuit #3

In general, the following recommendations apply for the use of line models in EMTP studies:

1. Use lumped R-L branch models only for steady-state calculations of to represent remote unswitched lines.
2. Distributed lines are more accurate than cascaded p sections for overhead lines. However, the user needs to be aware of the time-step limitation when using this model for short lengths of feeder. For transients less than several kilohertz, π sections should provide reasonable results.
3. Constant parameter line model parameters may be calculated for a predominate transient frequency, rather than 60 Hz. The user should keep in mind that this will produce incorrect results for the fundamental solution.
4. Frequency-dependent, distributed parameter line models provide the highest level of accuracy. The time-step limitation is the same as for the constant-parameter distributed line model.

Capacitor Bank Modeling

R-L-C Branch:

```
C <---Nodes--><---Refer--><-ohms<---mH<---uF<--------------------------------Out
C <-Bus1<-Bus2<-Bus3<-Bus4<----R<----L<----C                                  V
   CAP1A   CN1              0.10 0.020 54.81                                  1
   CAP1B   CN1              0.10 0.020 54.81
   CAP1C   CN1              0.10 0.020 54.81
C .....^.....^.....^.....^.....^.....^.....^.................................^
     CN1                  9999.9                                             2
C .....^.....^.....^.....^.....^.....^.....^.................................^
```

13.2kV distribution capacitor Bank:

3.6 MVAr capacitor bank @ 13.2kV (wye/grounded)
(includes 20µH fixed reactor)

$$X_C = \frac{kV_{\phi\phi}^{\ 2}}{MVAr_{3\phi}} = \frac{13.2^2}{3.6} = 48.4\Omega \qquad C = \frac{1}{\omega X_C} = \frac{1}{(2\pi 60)\cdot 48.4\Omega} = 54.81\mu F$$

Rule Book: 6.1.2

For capacitor energizing cases where there is a single bank on the bus, bank and bus inductance can often be neglected. However, for back-to-back switching cases, the bus inductance may be one of the most significant elements in the model. Energizing a capacitor bank, with another bank already connected to the bus, results in a high magnitude, high frequency current that flows between the banks. In the EMTP simulation, the bus inductance may be the only element to limit this inrush current, and therefore, is required. ANSI/IEEE Standard C37.012-1979 provides a table of typical values for bus inductance (mH/ft), bank self inductance (mH), and total inductance between banks (mH).

$$C_Y = \frac{MVAr_{3\phi}}{\omega * kV_{\phi\phi}^{\ 2}}$$

Feeder Capacitor Model

Circuit #1

```
C <-----------------------System Data - Distribution Cap Banks and Circuit Load
C
C <-------- Circuit #1, 1200kVAr, 7.62kV Can - Fixed Bank @ Node 100
C
/BRANCH
C <---Nodes--><---Refer--><-ohms<---mH<---uF<--------------------------------Out
C <-Bus1<-Bus2<-Bus3<-Bus4<----R<----L<----C                                  V
    100A  DC1N                        18.27
    100B  DC1N                        18.27
    100C  DC1N                        18.27
C .....^.....^.....^.....^.....^.....^.....^.................................^
    DC1N                 0.0001
C .....^.....^.....^.....^.....^.....^.....^.................................^
```

grounded - wye

$$C_Y = \frac{MVAr_{3\phi}}{\omega * kV_{\phi\phi}^{\ 2}} = \frac{1.2}{\omega * 13.2^2} = 18.27\mu F$$

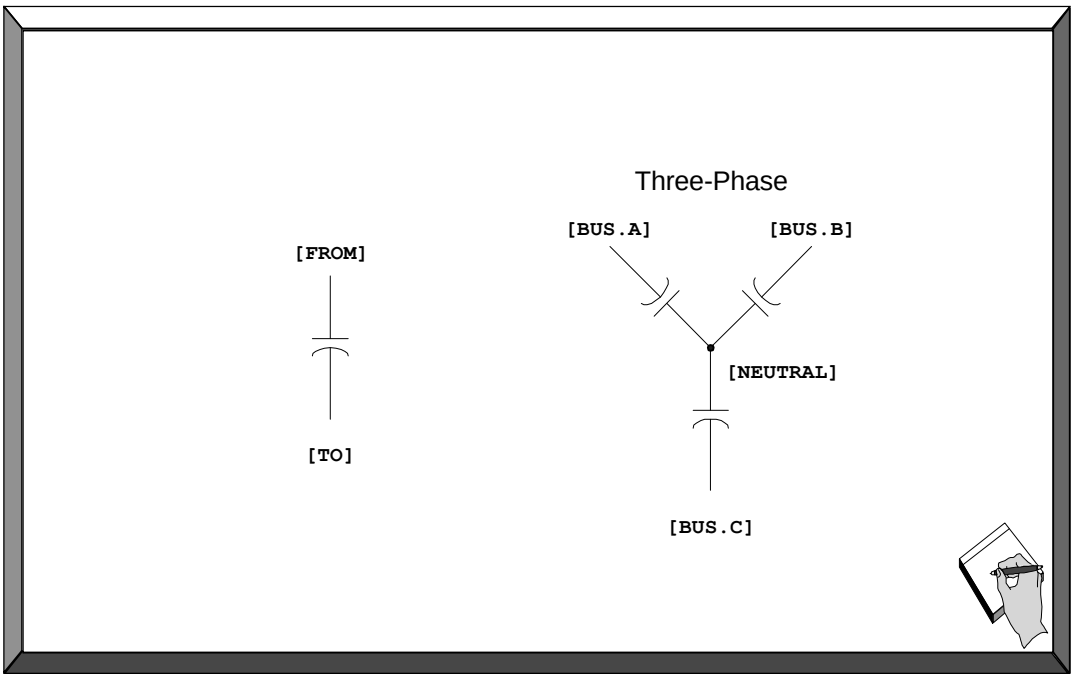

Capacitor Switch Model

```
/SWITCH
C [max phase-to-phase A-B, max phase-to-ground C (worst case)]
C Bus1->Bus2-><---Tclose<----Topen<-------Ie<---Vflash<--Request<-----Target<--O
   VAC1A CAP1A  80.60E-3 999.9E-03                                              1
   VAC1B CAP1B  80.60E-3 999.9E-03
   VAC1C CAP1C  84.77E-3 999.9E-03
C .....^.....^.........^.........^.........^.........^.........^...........^...^
```

Remarks:

Breaker closes @ 80.60mSec
(does not open - 9999)

Current through breaker is
requested (1 - col 80)

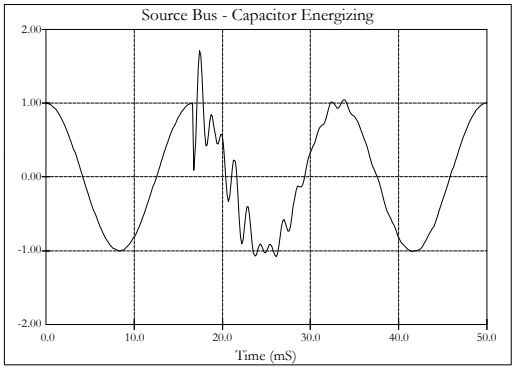

Rule Book: 9.3

Load Modeling - Discussion

Load Model:

- 60 Hz solution
- High frequency characteristic

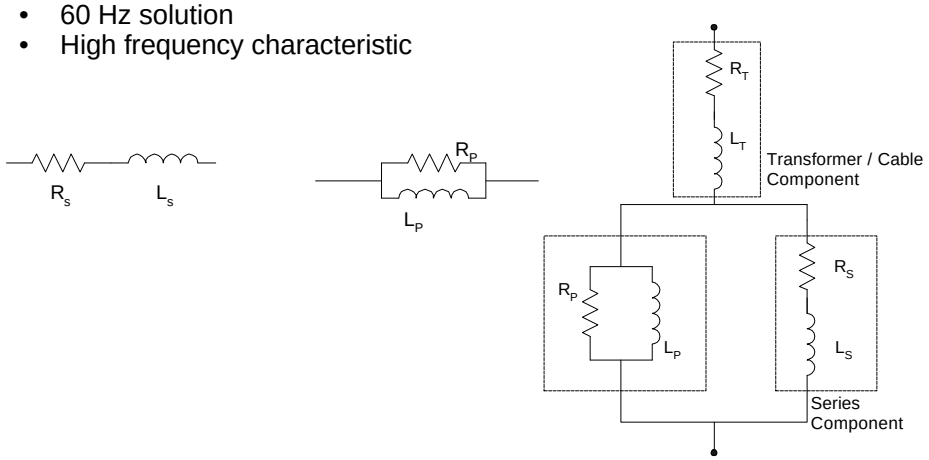

Impact of load is often ignored or significantly underrepresented during transient and harmonic studies.

Transmission and Distribution *Volume 3, Slide 116*

Typically, impedance of the transformer/cable component is in the range of 5-15%, depending on whether the system is residential, commercial, or industrial, and if there is significant lengths of cable associated with the application. The user can determine the component parameters based on an overall load kVA and power factor level, and by selecting the split between the series and parallel components. It should be noted that this model may not provide an adequate level of damping at higher frequencies, primarily due to the increasing series reactance of the transformer/cable component. An improvement to this model would be to include additional elements (i.e. parallel resistance) so the frequency response of the transformer/cable component more accurately represents the actual elements. However, for the distribution system / power quality studies illustrated in this guide, the model illustrated above (hybrid) should provide adequate results.

Substation Load Model

```
C <-------- 13.2kV Substation Bus - 5 MW @ 0.95pf
C
/BRANCH
C <---Nodes--><---Refer--><-ohms<---mH<---uF<-------------------------------Out
C <-Bus1<-Bus2<-Bus3<-Bus4<----R<----L<----C                                 V
   13_2A 13_2B            110.1
   13_2B 13_2C            110.1
   13_2C 13_2A            110.1
C .....^.....^.....^.....^.....^.....^.....^.................................^
   13_2A 13_2B                  888.1
   13_2B 13_2C                  888.1
   13_2C 13_2A                  888.1
C .....^.....^.....^.....^.....^.....^.....^.................................^
```

Load Model:
Delta Connected, Parallel R-L

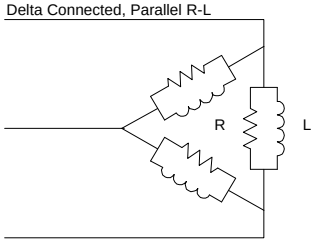

$$R = \frac{kV_{\phi\phi}^{\ 2}}{MW_{1\phi}}$$

$$L = \left(\frac{kV_{\phi\phi}^{\ 2}}{MVAr_{1\phi}}\right) \Big/ (2\pi \cdot f)$$

There are any number of combinations for series and parallel R-L models that can be used, each with certain advantages and disadvantages.

MVA / PF Load Data - Series and Parallel RL Branch

Voltage:	13.20	kV	MVA:	5		PF:	0.95	
	60	Hz	MW & MVAr:	4.75	1.56		18.19 °	

		R	L		R	L	
Series:	Delta Z:	99.32	86.59	Wye Z:	33.11	28.86	Ω & mH
Parallel:	Delta Z:	110.05	888.11	Wye Z:	36.68	296.04	Ω & mH

Feeder Load Model

Circuit #1

```
C <-------- Circuit #1, 1.5MVA - 0.9pf, 13.2kV Load @ Node 100
C
C [series connected load]
C <---Nodes--><---Refer--><-ohms<---mH<---uF<--------------------------------Out
C <-Bus1<-Bus2<-Bus3<-Bus4<----R<----L<----C                                  V
    100A  100B            313.6 402.9
    100B  100C            313.6 402.9
    100C  100A            313.6 402.9
C .....^.....^.....^.....^.....^.....^.....^.....................................^
C
C
C
C
C [parallel connected load]
C <---Nodes--><---Refer--><-ohms<---mH<---uF<--------------------------------Out
C <-Bus1<-Bus2<-Bus3<-Bus4<----R<----L<----C                                  V
    100A  100B            387.2
    100B  100C            387.2
    100C  100A            387.2
C .....^.....^.....^.....^.....^.....^.....^.....................................^
    100A  100B                  2121.
    100B  100C                  2121.
    100C  100A                  2121.
C .....^.....^.....^.....^.....^.....^.....^.....................................^
```

$$\frac{13.2^2}{\left(1.35/3\right)} = 387.2\Omega$$

$$\frac{13.2^2}{\left(0.65/3\right)} = 799.5\Omega = 2121\text{mH}$$

MVA / PF Load Data - Hybrid Series/Parallel RL Branch

Voltage:	13.20	kV	MVA:	1.5		PF:	0.9	
	60	Hz	MW & MVAr:	1.35	0.65		25.84 °	
Series:	R	L		R	L			
Delta Z:	313.632	402.915	Wye Z:	104.544	134.305		Ω & mH	
Parallel:				R	L			
Delta Z:	387.200	2120.655	Wye Z:	129.067	706.885		Ω & mH	
	Line Current:	**|Z(wye)|**	116.16	**>>>>>>>**	**65.6**		A	

Feeder Load Model - cont

Circuit #1

```
C [hybrid series/parallel connected load]
C <---Nodes--><---Refer--><-ohms<---mH<---uF<-------------------------------Out
C <-Bus1<-Bus2<-Bus3<-Bus4<----R<----L<----C                                 V
    100A 100LA                  23.11
    100B 100LB                  23.11
    100C 100LC                  23.11
C .....^.....^.....^.....^.....^.....^.....^.................................^
   100LA  100N            580.8
   100LB  100N            580.8
   100LC  100N            580.8
C .....^.....^.....^.....^.....^.....^.....^.................................^
   100LA  100N            101.6 275.1
   100LB  100N            101.6 275.1
   100LC  100N            101.6 275.1
C .....^.....^.....^.....^.....^.....^.....^.................................^
    100N                              0.01
C .....^.....^.....^.....^.....^.....^.....^.................................^
```

$$L_{tx} \Rightarrow Z_{base} * 15\%_{(Xtx)} * 50\%_{(loading)} = 8.71\Omega = 23.11\text{mH}$$

Total Load: **1.500** MVA

Transformer: **7.5** (Xtx) % % Loading: **100.0**
Linear: **20.0** % 1.500
Motor: **80.0** % @ pf = **0.7**

Zbase: **116.16** Ω 116.16

X(tx): **8.71** Ω
23.11 mH

R(linear): **580.80** Ω

Z(motor): **145.20** Ω
45.57 °

R(motor): **101.64** Ω
X(motor): **103.69** Ω **275.06** mH

Line Current: **|Z(wye)|** **127.597** >>>>>>> **59.7** A
40.1 ° 0.77 pf

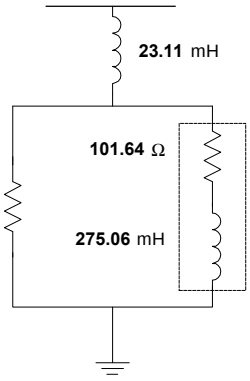

MOV Arrester Setup

10kV MOV Arrester:

```
/BRANCH
C [connectivity - measuring current]
C <---Nodes--><---Refer--><-ohms<---mH<---uF<-------------------------------Out
C <-Bus1<-Bus2<-Bus3<-Bus4<----R<----L<----C                                 V
C  13_2A  MOVA            0.001                                              1
C  13_2B  MOVB            0.001                                              1
C  13_2C  MOVC            0.001                                              1
C .....^.....^.....^.....^.....^.....^.....^.....................................^
C
C [single-exponential no gap]
C <-BUS1<-BUS2<-BUS3<-BUS4<-----------5555.<----------------------------------0
92  MOVA                              5555.                                   4
C .....^.....^.....^.....^............^^^^.....................................^
C
C ------------------VREF<-------------------VFLASH<-------------------VZERO
                  20900.                     -100.
C ....................^.......................^........................^
C ------------------COEF<--------------------EXPON<--------------------VMIN
                    500.                       30.                        .5
C ....................^.......................^........................^
                    9999
C
C <-BUS1<-BUS2<-BUS3<-BUS4<-----------5555.<----------------------------------0
92  MOVB        MOVA                  5555.                                   4
92  MOVC        MOVA                  5555.                                   4
C .....^.....^.....^.....^............^^^^.....................................^
```



```
C [switch opening - phase A fails to open]
C BUS-->BUS--><---TCLOSE<----TOPEN<-------IE<----FLASH<--REQUEST<-----TARGET<--O
   BUS_A CAP1A  -1.00E-3 999.9E-03
   BUS_B CAP1B  -1.00E-3  25.0E-03
   BUS_C CAP1C  -1.00E-3  25.0E-03
C .....^.....^.........^.........^.........^.........^.........^..........^...^
C [first restrike on phase B]
C BUS-->BUS--><---TCLOSE<----TOPEN<-------IE<----FLASH<--REQUEST<-----TARGET<--O
   CAP1B BUS_B  38.90E-3  39.0E-03
C .....^.....^.........^.........^.........^.........^.........^..........^...^
C [second restrike on phase B]
C BUS-->BUS--><---TCLOSE<----TOPEN<-------IE<----FLASH<--REQUEST<-----TARGET<--O
C  CAP1B BUS_B  47.20E-3  47.3E-03
C .....^.....^.........^.........^.........^.........^.........^..........^...^
C
C [third restrike on phase B]
C BUS-->BUS--><---TCLOSE<----TOPEN<-------IE<----FLASH<--REQUEST<-----TARGET<--O
   CAP1B BUS_B  55.56E-3 999.9E-03
C .....^.....^.........^.........^.........^.........^.........^..........^...^
```

Type 40 Induction Motor Setup

```
C        <---percent<----Hertz
C <-BusA <-Init-Slip<-Sys-Freq
40MOTORA       100.0      60.0
C .....^xx........^........^(initial slip: 100 standstill, 0 for synch speed)
40MOTORB
40MOTORC
C .....^
DESIGN RATIO             1.0
C .......................^ (default = 1.0)
C <-----HP<----Volts<--perunit<--perunit<--perunit
C <-PowerR<-VoltageR<-PowFactR<-----EffR<----SlipR
   -1200.0    4160.0     0.900     0.935     0.010
C .......^........^........^........^........^
C
C <perunit<--perunit<--perunit<--perunit
C <-AmpsSt<---TorqSt<-VoltsRed<--AmpsRed
       5.7       1.2
C .......^........^........^........^
C [motor ratings - saturation]
C <perunit<--perunit
C <-AmpSat<--TorqMax
       2.0
C .......^........^
C (col 2) <---kg-m^2
C <-Poles-<-InertiaM<-BusM
 4            15.0  ROTOR1
C xxxxxxxx........^.....^ (BusM is the mechanical node)
```

Rule Book: 10.12.21

Initial slip (standstill): 100%

Induction motor:

Rating:	1200 Hp, 3-phase, 4-pole, 60 Hz, 4160 V
Efficiency:	93.5%
Power Factor:	90.0%
Full Load Slip:	1.0%
Motor Losses:	5% (friction and windage)
Design Ratio:	1.00 (default value - refer to rule book)
Starting Current:	5.7 pu
Starting Torque:	1.2 pu
Moment of Inertia:	15kg-m^2

Type 40 Induction Motor Data

$$Z_{base} = \frac{V^2}{\left[\left(HP*746\right)/\left(\eta*pf\right)\right]} = \frac{4160^2}{\left[\left(1200*746\right)/\left(0.935*0.900\right)\right]} = 16.27\Omega$$

$$\omega = \frac{120*f}{p} = \frac{120*60}{4} = 1800\,RPM \qquad = 188.5\,rad/sec \qquad T_{FL} = \left(\frac{HP*746}{\left(1-slip\right)*\omega}\right) = 4797\,N-M$$

$$R_{Loss} = \frac{\omega}{T_{FL}*Losses_{\%}} = \frac{188.5}{4797*5\%} = 0.78\Omega$$

```
/BRANCH
C <---Nodes--><---Refer--><-ohms<---mH<---uF<--------------------------------Out
C <-Bus1<-Bus2<-Bus3<-Bus4<----R<----L<----C                                  V
        ROTOR1              0.78
C .....^.....^.....^.....^.....^.....^.....^.....................................^
/SOURCE
C --Bus><><-----Ampl<-----Freq<----Phase<-------A1<------T1><---Tstart<----Tstop
14LDTORQ-1  -4797.16   0.00001                              1500.0E-3      9999
C .....^.^.........^.........^.........^.........^........^..........^.........^
```

Transmission and Distribution *Volume 3, Slide 122*

Type 40 Initialization (startup)

Machine Startup - low voltage, three-phase source:

```
/SOURCE
C [low voltage three-phase source for type 40 initialization (startup)]
C BUS--><I<AMPLITUDE<FREQUENCY<--TOIPHIO<-------A1<------T1><---TSTART<----TSTOP
14 STARA        0.01      60.0         0                          -1.0     9999.
14 STARB        0.01      60.0      -120                          -1.0     9999.
14 STARC        0.01      60.0       120                          -1.0     9999.
C .....^.^.........^.........^.........^.........^........^..........^.........^
C
/SWITCH
C [connectivity for type 40 initialization (startup)]
C BUS-->BUS--><---TCLOSE<----TOPEN<-------IE<----FLASH<--REQUEST<-----TARGET<--O
   STARAMOTORA -50.00E-3   50.E-06
   STARBMOTORB -50.00E-3   50.E-06
   STARCMOTORC -50.00E-3   50.E-06
C .....^.....^.........^.........^.........^.........^.........^...........^...^
C
/SWITCH
C [connectivity for transformer to motor bus]
C BUS-->BUS--><---TCLOSE<----TOPEN<-------IE<----FLASH<--REQUEST<-----TARGET<--O
  B4160AMOTORA  50.00E-3     9999.                                             1
  B4160BMOTORB  50.00E-3     9999.
  B4160CMOTORC  50.00E-3     9999.
C .....^.....^.........^.........^.........^.........^.........^...........^...^
```

RMS Meter Setup

```
/TACS
C
C [pick up branch current from EMTP]
91B4160A                  60.0
C .....^XX.........^.........^.........^XXXXXXXXXXXXXXXXXXXX.........^.........^
C
C [pick up node voltage from EMTP]
90B4160B                  60.0
C .....^XX.........^.........^.........^XXXXXXXXXXXXXXXXXXXX.........^.........^
C
88 IARMS66+B4160A                                   60.0
C .....^.^^.....^X^......^X......^X^.....^X^.....^X.....^.....^.....^.....^.....^
88 VBRMS66+B4160B                                   60.0
C .....^.^^.....^X^......^X......^X^.....^X^.....^X.....^.....^.....^.....^.....^
C
C [output request]
C <-Bus1<-Bus2
33 IARMS VBRMS
C .....^.....^
```

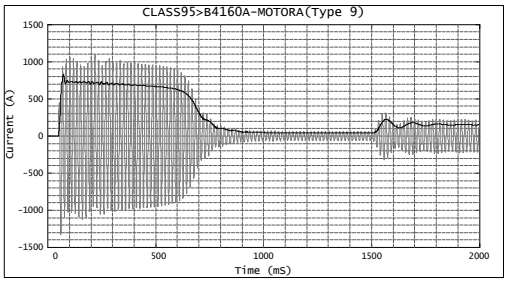

Back-to-Back Switching

- Energizing a shunt capacitor bank, with an adjacent bank already in service, can result in high-magnitude, high-frequency inrush currents.
- This operation is known as “back-to-back switching”.
- Reactors or preinsertion devices may be required to limit the inrush current during energization of the second bank.
- Breaker (switch) inrush capability, I_{pk} and f should be evaluated.

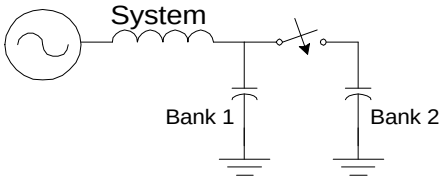

Transmission and Distribution *Volume 3, Slide 125*

Where:

Vo is the initial voltage on bank number 1

Lb is the bus inductance between banks

Lc is the self inductance of capacitor bank

C1 is the capacitance of the first bank

C2 is the capacitance of the second bank

$$I_{pk} = \frac{Vo}{Z_s}$$

$$Z_s = \sqrt{\frac{L_{eq}}{C_{eq}}}$$

$$f = \frac{1}{2\pi\sqrt{(L_{eq}C_{eq})}}$$

$$L_{eq} = L_c + L_c + L_b$$

$$C_{eq} = \frac{C_1 C_2}{C_1 + C_2}$$

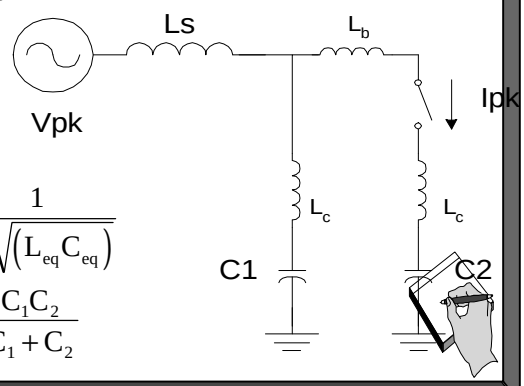

Back-to-Back Modeling Considerations

Can't Ignore Bus...

Typical Values of Inductance Between Capacitor Banks:

Rated Voltage	**< 15.5kV**
Bus Inductance:	**0.214mH**
Bank Self Inductance:	**5mH**
Typical Inductance Between Banks:	**10-20mH**

from: ANSI/IEEE C37.012-1979

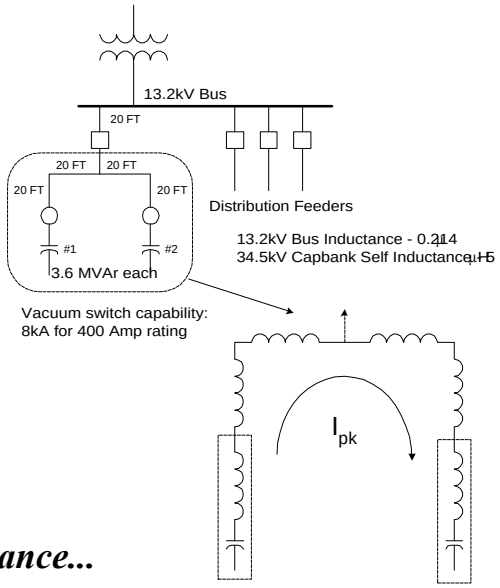

What about resistance...

Inrush reactor: X/R ≈ 15

Bus: X/R ≈ 3

```
/BRANCH
$VINTAGE, 1
C <---Nodes--><----------><-----------Ohms<-------------mH<-------------uF<--Out
C Bus1->Bus2-><----------><--------------R<--------------L<--------------C     V
   13_2A CAPBA                     0.0004         0.00428                     1
   13_2B CAPBB                     0.0004         0.00428
   13_2C CAPBC                     0.0004         0.00428
C .....^.....^xxxxxxxxxxxx..............^..............^..20 FT........^xxxxx^
   CAPBA VAC1A                     0.0008         0.00856                     1
   CAPBB VAC1B                     0.0008         0.00856
   CAPBC VAC1C                     0.0008         0.00856
C .....^.....^xxxxxxxxxxxx..............^..............^..40 FT........^xxxxx^
   CAPBA VAC2A                     0.0008         0.00856                     1
   CAPBB VAC2B                     0.0008         0.00856
   CAPBC VAC2C                     0.0008         0.00856
C .....^.....^xxxxxxxxxxxx..............^..............^..40 FT........^xxxxx^
$VINTAGE, 0
```

Back-to-Back Switching Snapshot #1

- High frequency back-to-back switching current waveform for a distribution system event:
- Impact of MOV arrester on opening (restrike) transient:

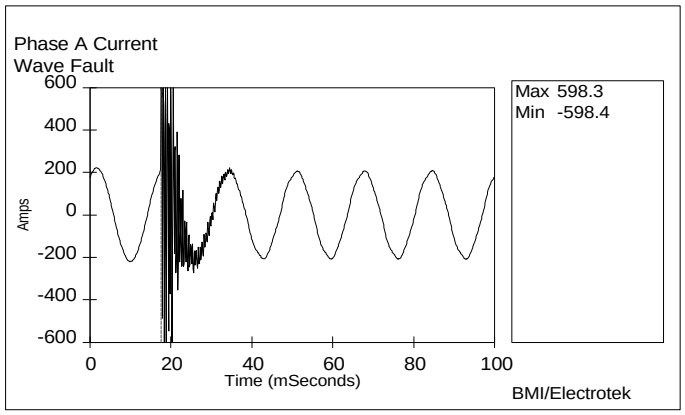

In addition to the bus and bank inductance, the EMTP case requires the proper value of resistance in order to accurately simulate the phenomena. Without the resistance, the high-frequency inrush current would remain severely underdamped and therefore continue throughout the case. Previous field measurements have indicated that the back-to-back inrush current lasts for a very short period of time, generally less than one-half of a 60 Hz cycle (8.3333mseconds). If actual resistance values are not available, the user should not ignore the elements, but rather rely on typical values. For example, the bus, which has an inductance of 0.214µF/ft, would have an X/R ratio of approximately three. In addition, if the losses for the bank are assumed to be approximately 0.2%, the resistance of the bank can be determined using:

$$R_{bank_{phase}} = \frac{P_{loss_{phase}}}{I^2_{FL\,\phi}} = \frac{(1200kVAr * 0.2\%)}{\left(kVAr_{bank} \big/ \left(\sqrt{3} * kV_{\phi\phi}\right)\right)^2} = \frac{2400}{157.5^2} = 0.0968\Omega$$

$$R_{reactor} = \frac{20\mu H * \omega}{15} = 0.0005\Omega$$

60Hz - doesn't include skin effect

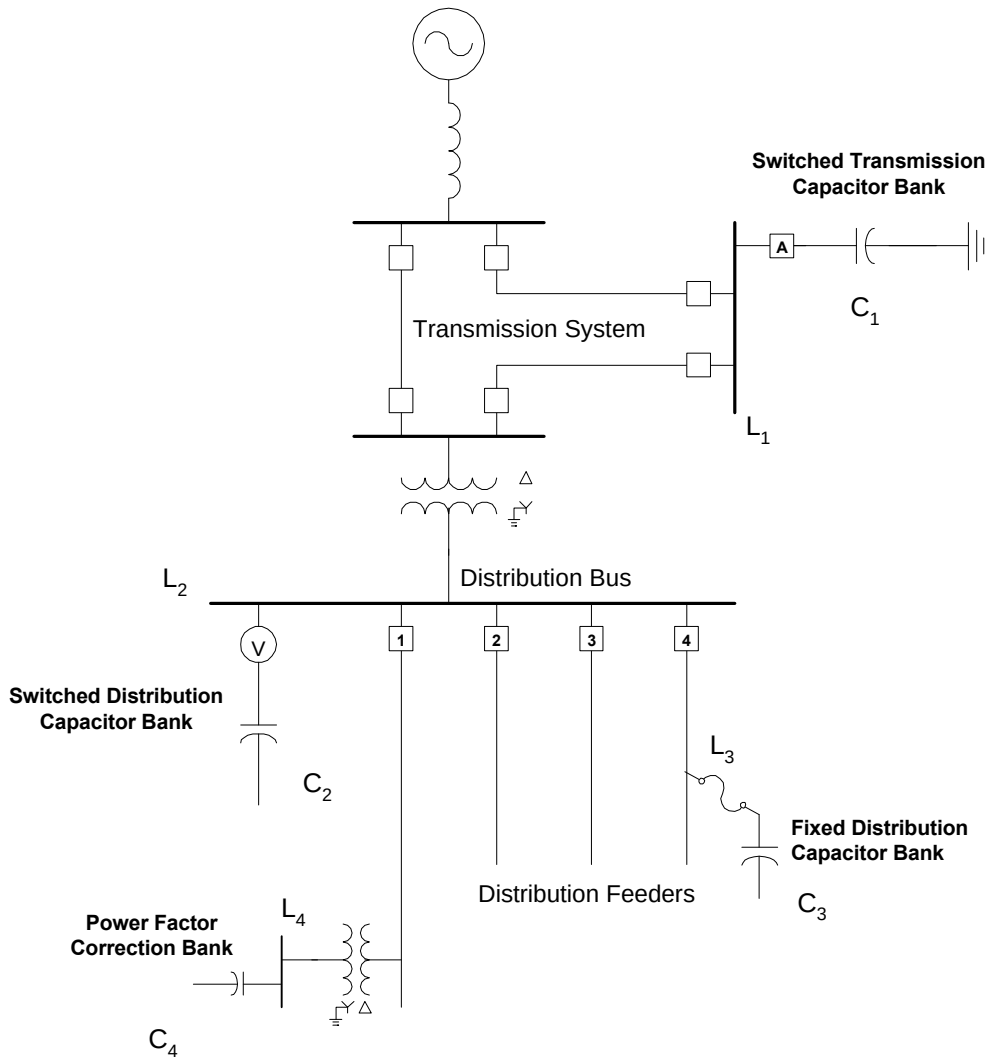

$$C_n = \frac{MVAr_n}{\omega \cdot kV_n^{\,2}} \qquad L_n = \frac{kV_n^{\,2}}{\omega \cdot MVA_{sc_n}}$$

$$f_n = \frac{1}{2\pi\sqrt{(L_n \cdot C_n)}} = f_{sys} * \sqrt{\left(\frac{MVA_{sc_n}}{MVAr_n}\right)} = f_{sys} * \sqrt{\left(\frac{\sqrt{3} \cdot kV_n \cdot kA_{sc_n}}{MVAr_n}\right)}$$

where: f_n = characteristic frequency (f_1 & f_2)
$\omega = 2*\pi*f_{sys}$
$MVAr_n$ = three-phase rating of the capacitor bank
$MVAsc_n$ = three-phase short circuit capacity (kAscn in amps)
kV_n = system voltage (line-to-line)

Effect of Compensation and Load Level

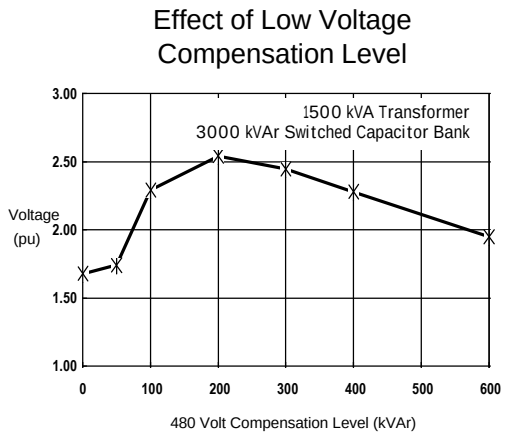

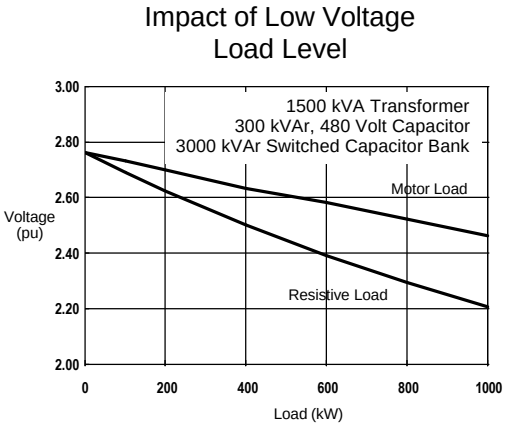

Transmission and Distribution *Volume 3, Slide 129*

```
C <--------------------------------480 Volt Capacitor Banks
C
C <---Nodes--><---Refer--><-ohms<---mH<---uF<-------------------------------Out
C <-Bus1<-Bus2<-Bus3<-Bus4<----R<----L<----C                                V
C  4801A 4801B                        383.8
C  4801B 4801C                        383.8
C  4801C 4801A                        383.8
C .....^.....^.....^.....^.....^.....^.....^....100 KVAr......................^
   4801A 4801B                        767.5
   4801B 4801C                        767.5
   4801C 4801A                        767.5
C .....^.....^.....^.....^.....^.....^.....^....200 KVAr......................^
C  4801A 4801B                       1151.3
C  4801B 4801C                       1151.3
C  4801C 4801A                       1151.3
C .....^.....^.....^.....^.....^.....^.....^....300 KVAr......................^
```

Effect of Low Voltage Filters and Arresters

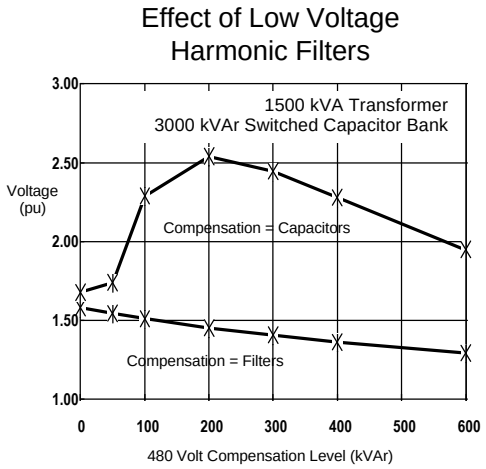

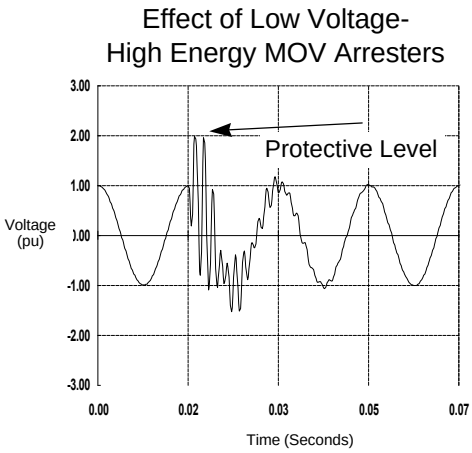

Transmission and Distribution *Volume 3, Slide 130*

```
C <--------------------------------480 Volt Filter Bank
C
C <---Nodes--><---Refer--><-ohms<---mH<---uF<-------------------------------Out
C <-Bus1<-Bus2<-Bus3<-Bus4<----R<----L<----C                                V
   4801A FIL1A                  0.140
   4801B FIL1B                  0.140
   4801C FIL1C                  0.140
C .....^.....^.....^.....^.....^.....^.....^....4.7th Filter Reactor...........^
   FIL1A FIL1B                        766.6
   FIL1B FIL1C                        766.6
   FIL1C FIL1A                        766.6
C .....^.....^.....^.....^.....^.....^.....^....200 kVAr......................^
```

Low Voltage Filter Model

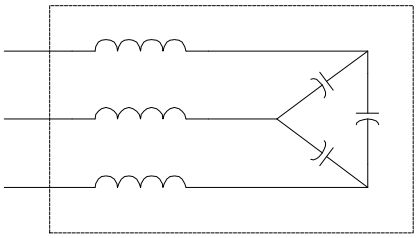

$$X_f = \frac{X_{c_Y}}{n^2} = \frac{\left(0.480/\sqrt{3}\right)^2 \Big/ \left(0.3/3\right)}{4.7^2} = 0.0348\Omega \Rightarrow 0.092\text{mH}$$

```
C <-------- 300kVAr Power Factor Correction - Configured as a 4.7th Filter
C
C
/BRANCH
C <---Nodes--><---Refer--><-ohms<---mH<---uF<-------------------------------Out
C <-Bus1<-Bus2<-Bus3<-Bus4<----R<----L<----C                                 V
   4801A FCAPA                  0.092                                        1
   4801B FCAPB                  0.092
   4801C FCAPC                  0.092
C .....^.....^.....^.....^.....^.....^.....^.................................^
   FCAPA FCAPB                       1151.3                                  2
   FCAPB FCAPC                       1151.3
   FCAPC FCAPA                       1151.3
C .....^.....^.....^.....^.....^.....^.....^.................................^
```

$$X_{c_\Delta} = \left(0.480\right)^2 \Big/ \left(0.3/3\right) = 2.304\Omega \Rightarrow 1151\mu\text{F}$$

Nuisance Tripping of ASDs

System One-Line Diagram:

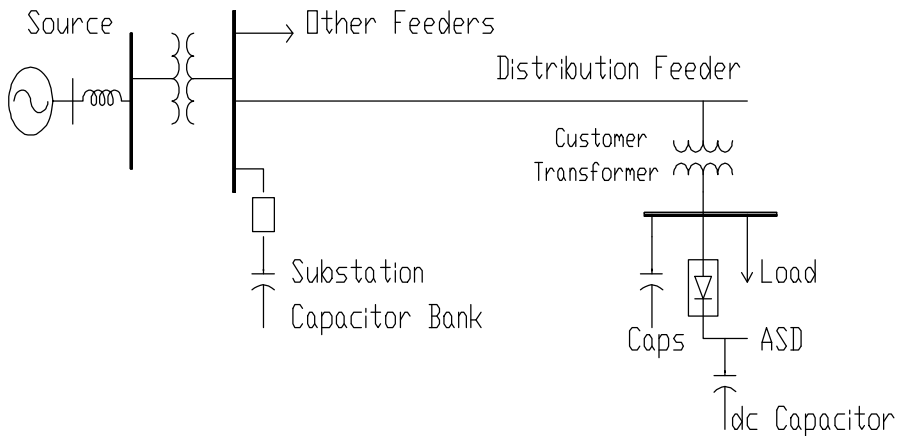

Nuisance tripping refers to the undesired shutdown of an adjustable-speed drive (or other power-electronic-based process device) due to the transient overvoltage on the device's dc bus. Very often, this overvoltage is caused by transmission and/or distribution capacitor bank energization. Considering the fact that many distribution banks are time clock controlled, it is easy to see how this event can occur on a regular basis, thereby causing numerous process interruptions for the plant.

The nuisance tripping event consists of an overvoltage trip due to a dc bus overvoltage on voltage-source inverter drives (PWM). Typically, for the protection of the dc capacitor and inverter components, the dc bus voltage is monitored and the drive tripped when it exceeds a preset level. This level is typically around 760 volts (for 480 V applications), which is only 117% of the nominal dc voltage.

ASD Components

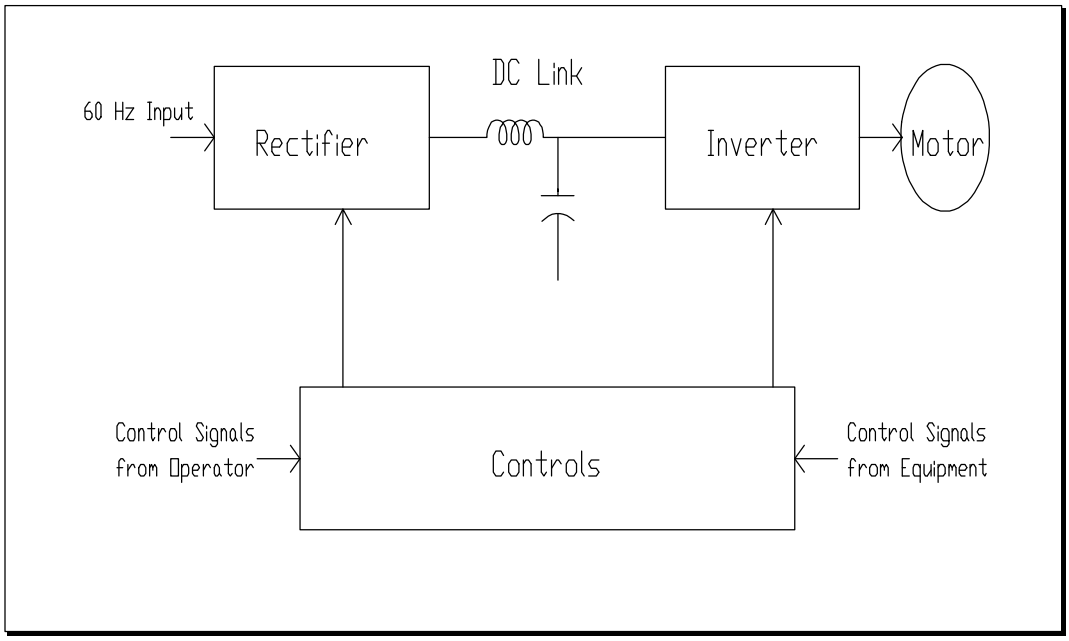

Transmission and Distribution *Volume 3, Slide 133*

The dc link capacitor is very sensitive to transient voltages on the ac power side. It is not uncommon for the dc overvoltage control to cause tripping of the drive whenever the dc voltage exceeds 1.2 pu (typical value).

Because the dc capacitors are connected to the ac system through the rectifier bridge, only one half cycle of the transient current can make it through to the capacitor. The current cannot flow in the reverse direction because of the diodes or SCRs in the rectifier bridge. Therefore, the capacitor switching transient causes an impulse of current that "charges up" the dc circuit. The dc circuit must then discharge through the load before normal operation can resume.

Simplified ASD Circuit Diagram

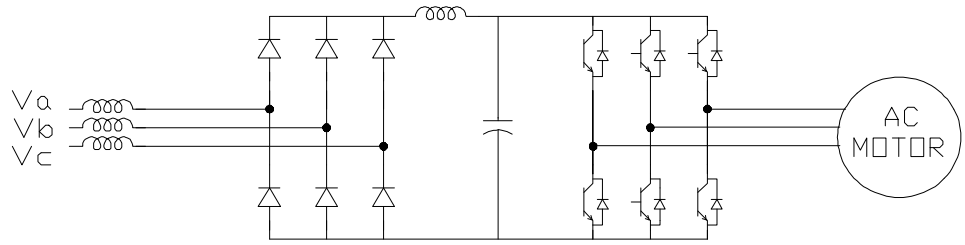

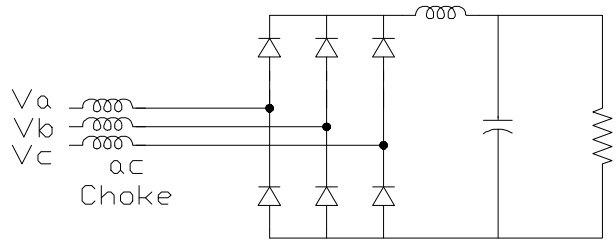

R(Load)

Simulates inverter and motor.

$$R = V^2 / P_{motor}$$

$$V_{dc} = \frac{3\sqrt{2}}{\pi} V_{LL} \approx 135 V_{LL} = 135 * 480 = 650V$$

$$P_{motor} = 10HP \approx 10kVA$$

$$R_d = \frac{650^2}{10000} = 42.25\Omega$$

Although this simplified model does not include the inverter or motor, previous measurements and simulations have proven that this modeling assumption is valid for the nuisance tripping evaluation. It is important to note that this is the minimum model that will allow evaluation of the capacitor switching transient / drive interaction. The possibility of drive tripping cannot be determined simply by monitoring (or simulating) the 480 volt bus voltage (either phase-to-phase or phase-to-ground).

Example Nuisance Tripping Waveforms

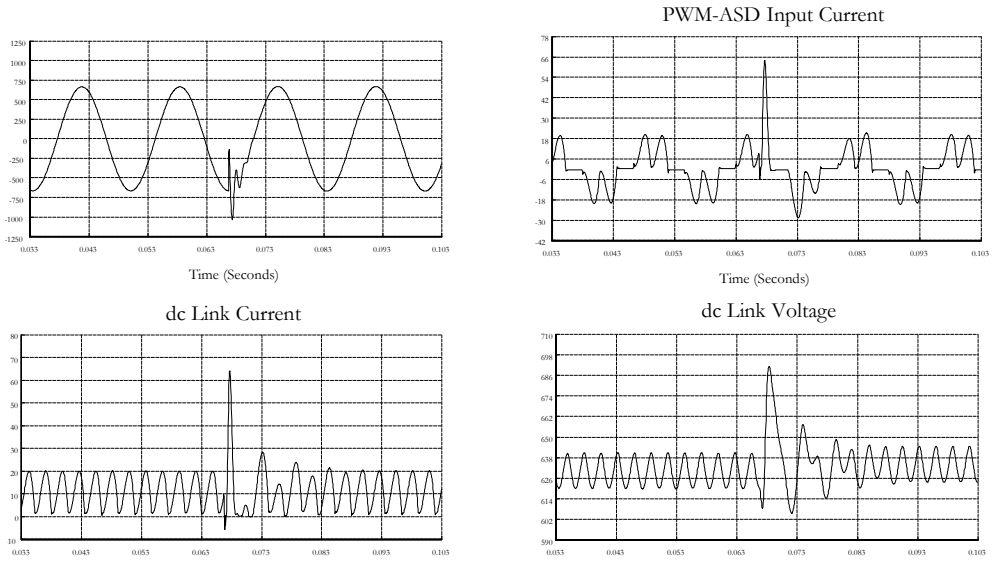

Measured drive current during utility capacitor switching:

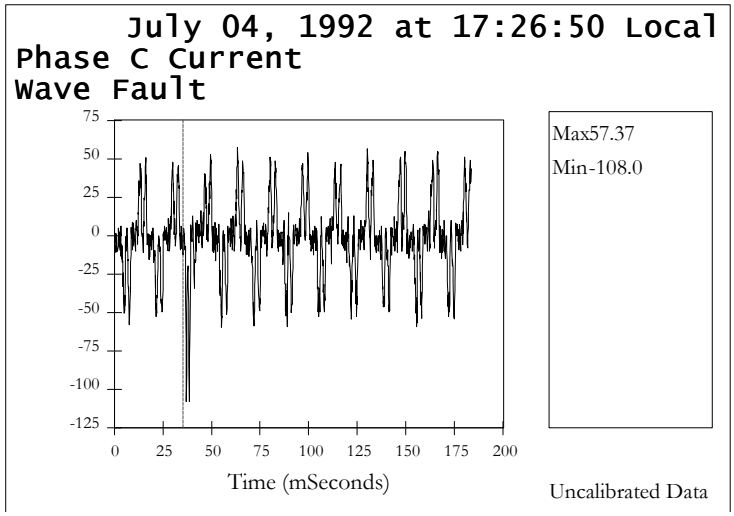

Effect of ac Side Choke

- Inductance on the ac side, in the form of an isolation transformer or **simple inductive choke**, has the most dramatic effect on the current surge because it introduces a large impedance into the circuit where the current flows.

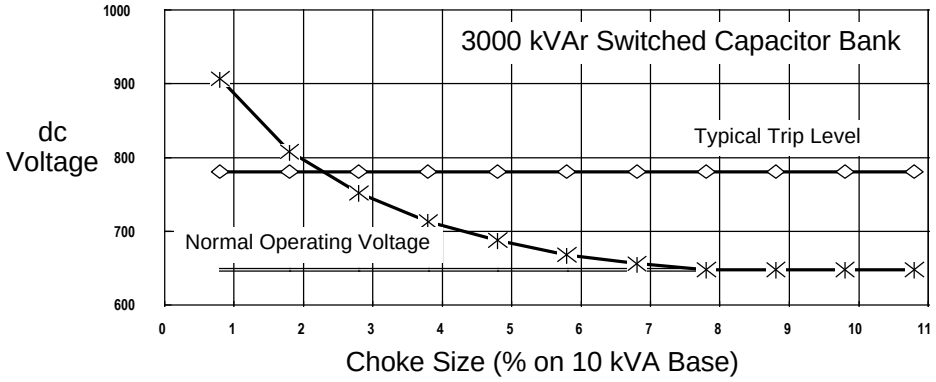

The potential for nuisance tripping is primarily dependent on the switched capacitor bank size, overvoltage controls for the switched bank, the dc bus capacitor size, and the inductance between the two capacitors. It is important to note that nuisance tripping can occur even if the customer does not have power factor correction capacitors.

The most effective methods for eliminating nuisance tripping are to significantly reduce the energizing transient overvoltage, or to "isolate" the drives from the power system through the use of series inductors, often referred to as "chokes". The additional series inductance of the choke will reduce the transient magnitude at the input to the ASD and the associated current surge into the dc link filter capacitor, thereby limiting the dc overvoltage.

Effect of Choke on dc Link Overvoltage

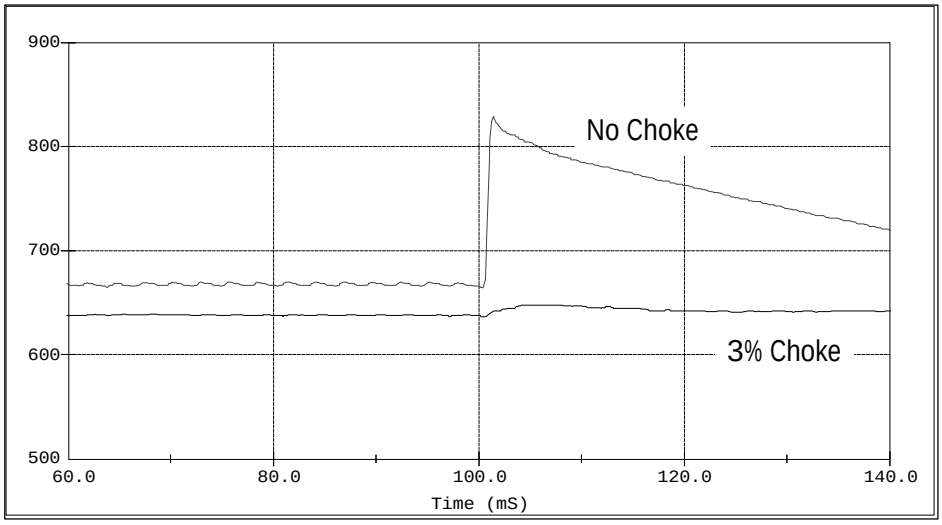

Transmission and Distribution *Volume 3, Slide 137*

While determining the precise inductor size for a particular application may require a fairly detailed computer simulation study, a more common approach involves the wide-spread application of a standard "3%" value. The 3% size is based upon the drive kVA rating and is usually sufficient for most applications where voltage magnification isn't also a concern. Figure 11 illustrates an example (simulation) dc overvoltage transient before and after the application of a 3% ac choke.

```
C <-------- 480 Volt Bus #2 Load (300kW)
C
C <---Nodes--><---Refer--><-ohms<---mH<---uF<-------------------------------Out
C <-Bus1<-Bus2<-Bus3<-Bus4<----R<----L<----C                                 V
   4802A 4802B              2.30                                            2
   4802B 4802C              2.30
   4802C 4802A              2.30
C .....^.....^.....^.....^.....^.....^.....^.................................^
C
/SWITCH
C
C
C <-------- 480 Capacitor Switch (or fuse blowing)
C
C BUS-->BUS--><---TCLOSE<----TOPEN<-------IE<----FLASH<--REQUEST<-----TARGET<--O
   4802A  FILA -10.00E-3 250.0E-03                                           1
   4802B  FILB -10.00E-3 250.0E-03                                           1
   4802C  FILC -10.00E-3 250.0E-03                                           1
C .....^.....^.........^.........^.........^.........^.........^...........^...^
C
/BRANCH
C
C <-------- 480 Volt Bus #2 Capacitor Bank - Filter Inductor
C
C <---Nodes--><---Refer--><-ohms<---mH<---uF<-------------------------------Out
C <-Bus1<-Bus2<-Bus3<-Bus4<----R<----L<----C                                 V
    FILA  PFCA            0.0001                                            2
    FILB  PFCB            0.0001
    FILC  PFCC            0.0001
C .....^.....^.....^.....^.....^.....^.....^.................................^
C
C <-------- 480 Volt Bus #2 Capacitor Bank (250kVAr)
C
C <---Nodes--><---Refer--><-ohms<---mH<---uF<-------------------------------Out
C <-Bus1<-Bus2<-Bus3<-Bus4<----R<----L<----C                                 V
    PFCA  PFCB                          959.4                                2
    PFCB  PFCC                          959.4
    PFCC  PFCA                          959.4
C .....^.....^.....^.....^.....^.....^.....^.................................^
    PFCA                                 0.01
    PFCB                                 0.01
    PFCC                                 0.01
C .....^.....^.....^.....^.....^.....^.....^.................................^
C
C <-------- Low Voltage Cable Impedance (connection to drive)
C
$VINTAGE, 1
C <---Nodes--><----------><-----------Ohms<-------------mH<-------------uF<--Out
C Bus1->Bus2-><----------><--------------R<--------------L<--------------C     V
   4801ACHOKEA                      0.0001          0.3056
   4801BCHOKEB                      0.0001          0.3056
   4801CCHOKEC                      0.0001          0.3056
C .....^.....^xxxxxxxxxxxx...............^...............^...............^xxxxx^
C
C <-------- Choke (Input) Impedance (0%)
C
C <---Nodes--><----------><-----------Ohms<-------------mH<-------------uF<--Out
C Bus1->Bus2-><----------><--------------R<--------------L<--------------C     V
  CHOKEATRMNLA                       0.001            0.01                    1
  CHOKEBTRMNLB                       0.001            0.01
  CHOKECTRMNLC                       0.001            0.01
C .....^.....^xxxxxxxxxxxx...............^...............^...............^xxxxx^
$VINTAGE, 0
C
```

$$L_{choke} = \frac{kV^2}{MVA_{drive}} = \frac{0.480^2}{\left(10/1000\right)} * 0.03 = 0.6912\Omega = 183mH$$

```
C <-------- Diode Snubber Circuits (Front-End)
C
C <---Nodes--><---Refer--><-ohms<---mH<---uF<-------------------------------Out
C <-Bus1<-Bus2<-Bus3<-Bus4<----R<----L<----C                                 V
  TRMNLARECPOS             100.0        1.00
  TRMNLBRECPOSTRMNLARECPOS
  TRMNLCRECPOSTRMNLARECPOS
C .....^.....^.....^.....^.....^.....^.....^.....................................^
  TRMNLARECNEGTRMNLARECPOS
  TRMNLBRECNEGTRMNLARECPOS
  TRMNLCRECNEGTRMNLARECPOS
C .....^.....^.....^.....^.....^.....^.....^.....................................^
C <-------- Connection to positive and negative dc bus
C
C <---Nodes--><---Refer--><-ohms<---mH<---uF<-------------------------------Out
C <-Bus1<-Bus2<-Bus3<-Bus4<----R<----L<----C                                 V
  DIOD1CRECPOS             0.005
  DIOD3CRECPOS             0.005
  DIOD5CRECPOS             0.005
C .....^.....^.....^.....^.....^.....^.....^.....................................^
  DIOD1CRECPOS                     0.05
  DIOD3CRECPOS                     0.05
  DIOD5CRECPOS                     0.05
C .....^.....^.....^.....^.....^.....^.....^.....................................^
  RECNEGDIOD4A             0.005
  RECNEGDIOD6A             0.005
  RECNEGDIOD2A             0.005
C .....^.....^.....^.....^.....^.....^.....^.....................................^
  RECNEGDIOD4A                     0.05
  RECNEGDIOD6A                     0.05
  RECNEGDIOD2A                     0.05
C .....^.....^.....^.....^.....^.....^.....^.....................................^
C
C <-------- Connection to power system (diode front-end)
C
C <---Nodes--><---Refer--><-ohms<---mH<---uF<-------------------------------Out
C <-Bus1<-Bus2<-Bus3<-Bus4<----R<----L<----C                                 V
  TRMNLADIOD1A             0.005
  TRMNLBDIOD3A             0.005
  TRMNLCDIOD5A             0.005
C .....^.....^.....^.....^.....^.....^.....^.....................................^
  TRMNLADIOD1A                     0.05
  TRMNLBDIOD3A                     0.05
  TRMNLCDIOD5A                     0.05
C .....^.....^.....^.....^.....^.....^.....^.....................................^
  DIOD4CTRMNLA             0.005
  DIOD6CTRMNLB             0.005
  DIOD2CTRMNLC             0.005
C .....^.....^.....^.....^.....^.....^.....^.....................................^
  DIOD4CTRMNLA                     0.05
  DIOD6CTRMNLB                     0.05
  DIOD2CTRMNLC                     0.05
C .....^.....^.....^.....^.....^.....^.....^.....................................^
C
C <-------- Phase-to-Phase Voltage Sampling
C
C <---Nodes--><---Refer--><-ohms<---mH<---uF<-------------------------------Out
C <-Bus1<-Bus2<-Bus3<-Bus4<----R<----L<----C                                 V
  TRMNLATRMNLB            1.0E08                                             2
  TRMNLBTRMNLC            1.0E08
  TRMNLCTRMNLA            1.0E08
C .....^.....^.....^.....^.....^.....^.....^.....................................^
C
```

```
C <-------- Starting Resistor
C
C <---Nodes--><---Refer--><-ohms<---mH<---uF<-------------------------------Out
C <-Bus1<-Bus2<-Bus3<-Bus4<----R<----L<----C                                 V
  RECPOSSTARTR             0.750
C .....^.....^.....^.....^.....^.....^.....^.................................^
C
/SWITCH
C
C <-------- Starting Resistor - Shorting Contact
C
C BUS-->BUS--><---TCLOSE<----TOPEN<-------IE<----FLASH<--REQUEST<-----TARGET<--O
  RECPOSSTARTR  40.00E-3 999.9E-03
C .....^.....^.........^.........^.........^.........^.........^...........^...^
C
/BRANCH
C <-------- dc Bus Components
C
C <---Nodes--><---Refer--><-ohms<---mH<---uF<-------------------------------Out
C <-Bus1<-Bus2<-Bus3<-Bus4<----R<----L<----C                                 V
  STARTRDCPLUS             0.001  0.01                                       1
C .....^.....^.....^.....^.....^.....^.....^.................................^
  DCMNUSDCPLUS             42.25
C .....^.....^.....^.....^.....^.....^.....^.................................^
  DCPLUSDCMNUS                      1200.0                                   2
C .....^.....^.....^.....^.....^.....^.....^.................................^
  RECPOS                                 1.0
C .....^.....^.....^.....^.....^.....^.....^.................................^
  RECNEG                                 1.0
C .....^.....^.....^.....^.....^.....^.....^.................................^
  RECNEGDCMNUS             0.001  0.01
C .....^.....^.....^.....^.....^.....^.....^.................................^
C
/SWITCH
C
C <-------- Diodes (front-end)
C
C BUS-->BUS--><------Vig<----Ihold<-------td<---------CLOSEDSame<Grid<Op/Cl<xxOO
11DIOD1ADIOD1C                 0.1
11DIOD3ADIOD3C                 0.1
11DIOD5ADIOD5C                 0.1
C .....^.....^.........^.........^.........^xxxxxxxxx^.....^...^.....^.....^xx^^
11DIOD4ADIOD4C                 0.1
11DIOD6ADIOD6C                 0.1
11DIOD2ADIOD2C                 0.1
C .....^.....^.........^.........^.........^xxxxxxxxx^.....^...^.....^.....^xx^^
C
/BRANCH
C
C <-------- Connection from 480 Volt Bus #2 to dc Drive
C
C <---Nodes--><---Refer--><-Ohms<---mH<---uF<---------------------------------O
C Bus1->Bus2->Bus3->Bus4-><----R<----L<----C                                 V
  200HPA 4802A            0.0001                                             1
  200HPB 4802B            0.0001                                             1
  200HPC 4802C            0.0001                                             1
C .....^.....^.....^.....^.....^.....^.....^xxxxxxxxxxxxxxxxxxxxxxxxxxxxxxxxxx^
C
C <-------- Reference connection
C
C <---Nodes--><---Refer--><-ohms<---mH<---uF<-------------------------------Out
C <-Bus1<-Bus2<-Bus3<-Bus4<----R<----L<----C                                 V
  200HPA                  1.0E08
  200HPB                  1.0E08
  200HPC                  1.0E08
C .....^.....^.....^.....^.....^.....^.....^.................................^
C
```

$$R_{dc} = \frac{V_{dc}^{\ 2}}{P} = \frac{650^2}{10000} = 42.25\Omega$$

General Approach to Voltage Sag Analysis

- Calculate Fault Current and Sag Magnitude
  (or simulation - commonly short circuit program)
- Estimate Fault Probability
- Determine Area of Vulnerability Characteristic
- Determine Equipment Sensitivity
- Determine Number of Customer Events
- Evaluate Solutions
  - Power System Design
  - Equipment Design
  - Power Conditioning Equipment

Transmission and Distribution *Volume 3, Slide 141*

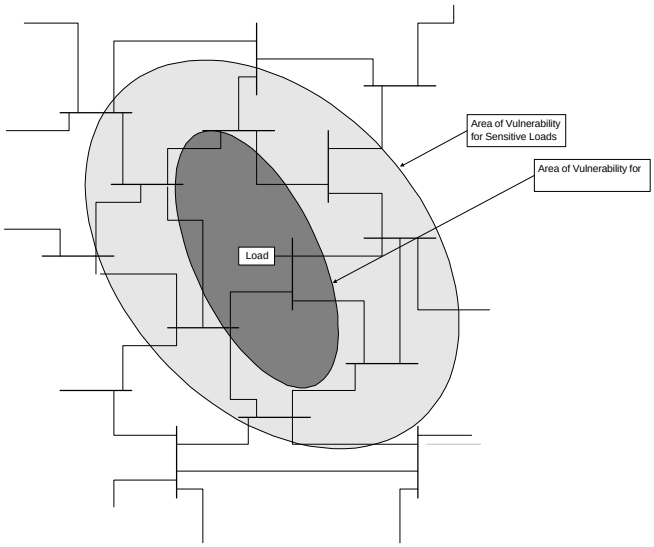

Determining Voltage Sag Characteristics

- Causes of fault conditions
- Effect of fault location
- Effect of transformer connections
- Effect of system protection practices
  - Effect of reclosing practices

Transmission and Distribution *Volume 3, Slide 142*

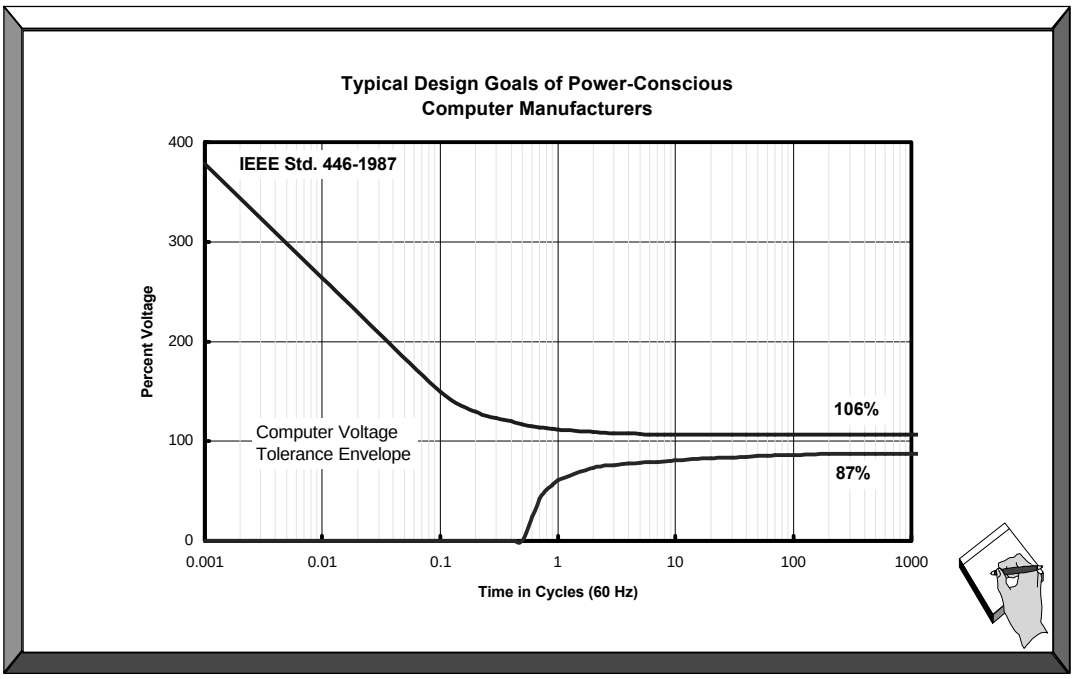

Voltage Sag Evaluations

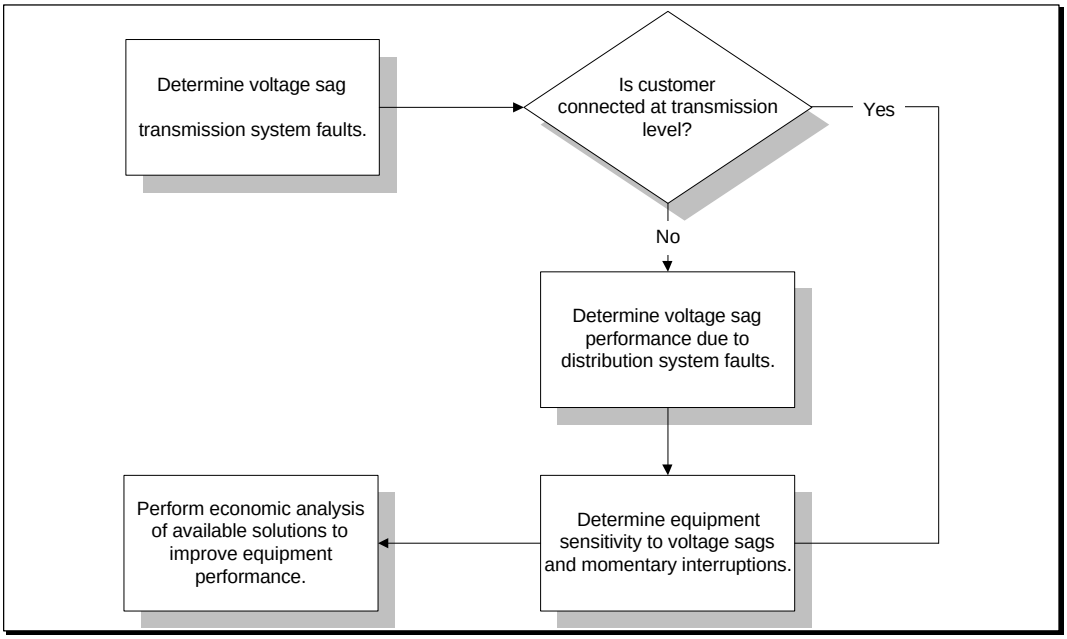

Transmission and Distribution *Volume 3, Slide 143*

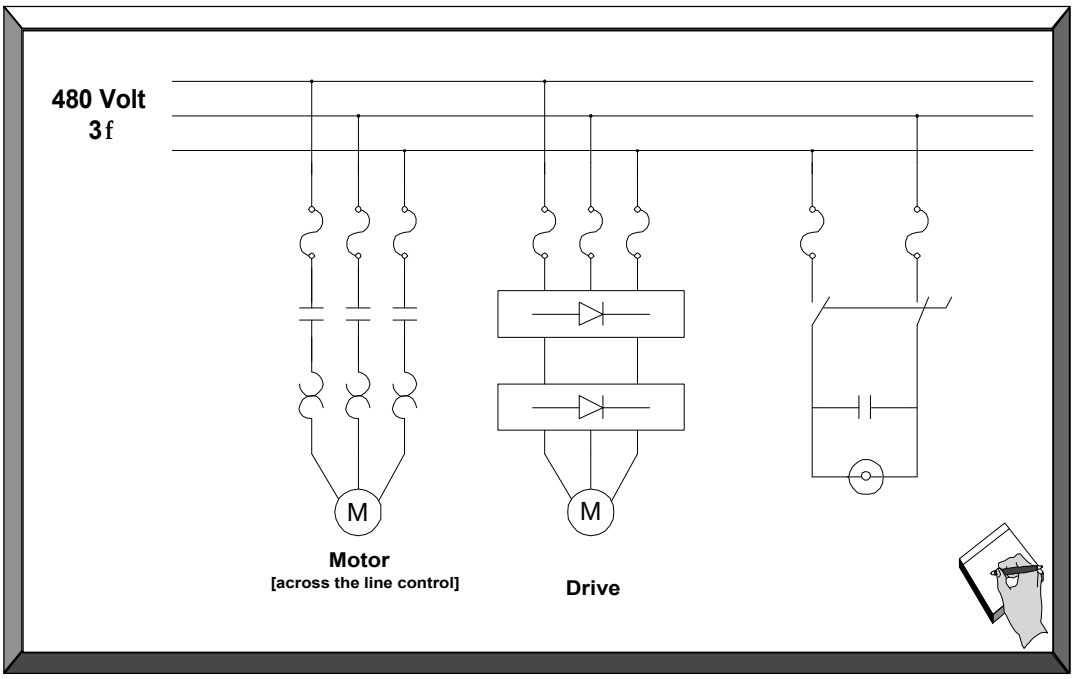

Measurement Results - Typical Event

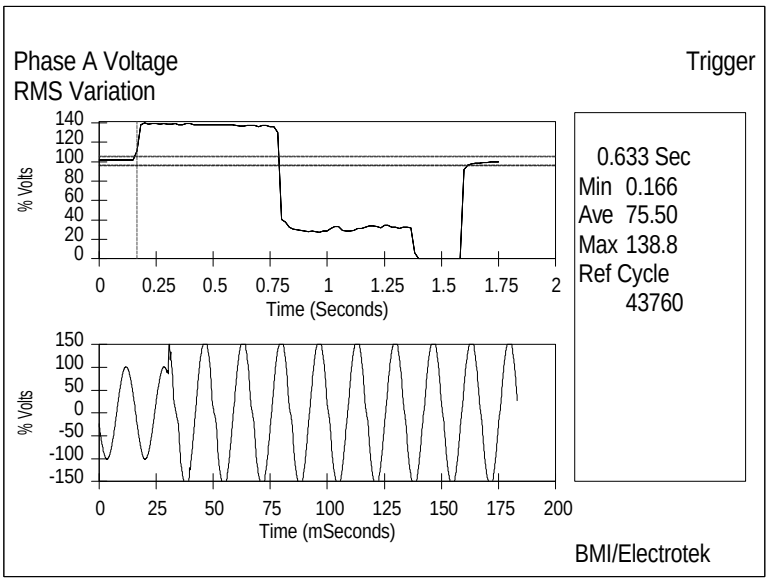


```
TACS HYBRID
C
/TACS
C
90XFMRHA                  60.0
90XFMRHB                  60.0
90XFMRHC                  60.0
C .....^XX.........^.........^.........^XXXXXXXXXXXXXXXXXXXX.........^.........^
C
88 VARMS66+XFMRHA                                   60.0
88 VBRMS66+XFMRHB                                   60.0
88 VCRMS66+XFMRHC                                   60.0
C .....^.^^.....^X^......^X......^X^.....^X^.....^X.....^.....^.....^.....^.....^
C
C <-Bus1<-Bus2<-Bus3
33 VARMS VBRMS VCRMS
C .....^.....^.....^
C
/SWITCH
C <-------- Fault Switch
C
C BUS-->BUS--><---TCLOSE<----TOPEN<-------IE<----FLASH<--REQUEST<-----TARGET<--O
  XFMRHA  FLTA  99.99E-3 233.33E-3                                              1
  XFMRHB  FLTB 166.66E-3 233.33E-3                                              1
C XFMRHC  FLTC  99.99E-3 166.67E-3                                              1
C .....^.....^.........^.........^.........^.........^.........^...........^...^
```

Node Voltage Input: Type 90

Integrator: Device 66

Simulation Results - Fault Phase (A)

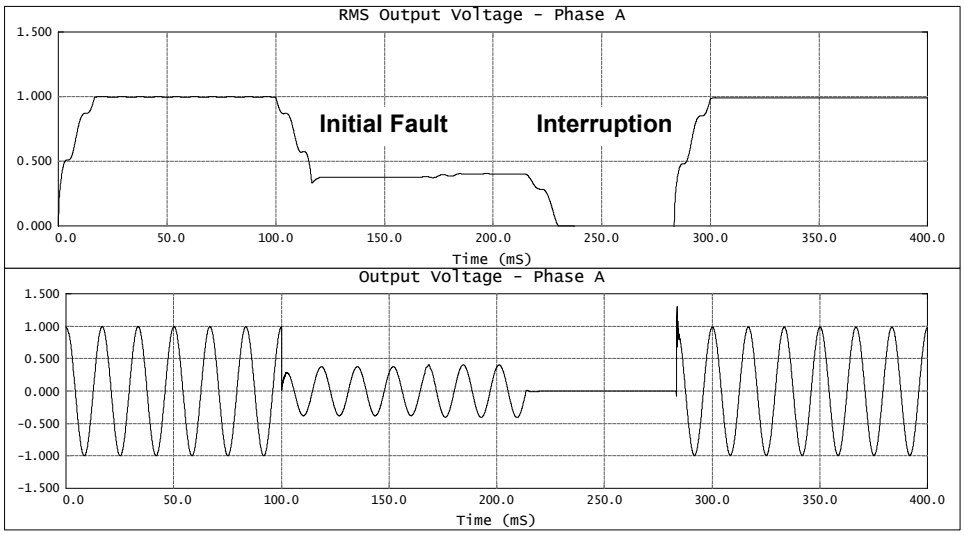

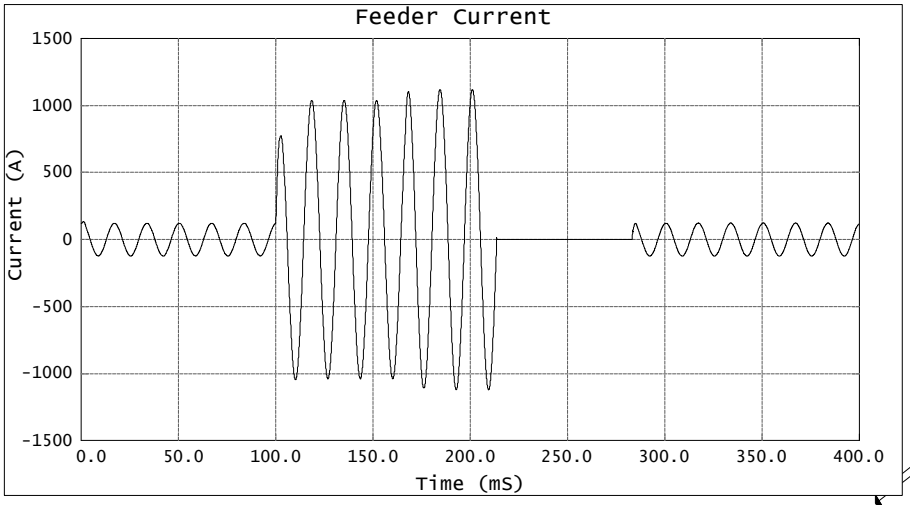

Simulation Results - Healthy Phase (B)

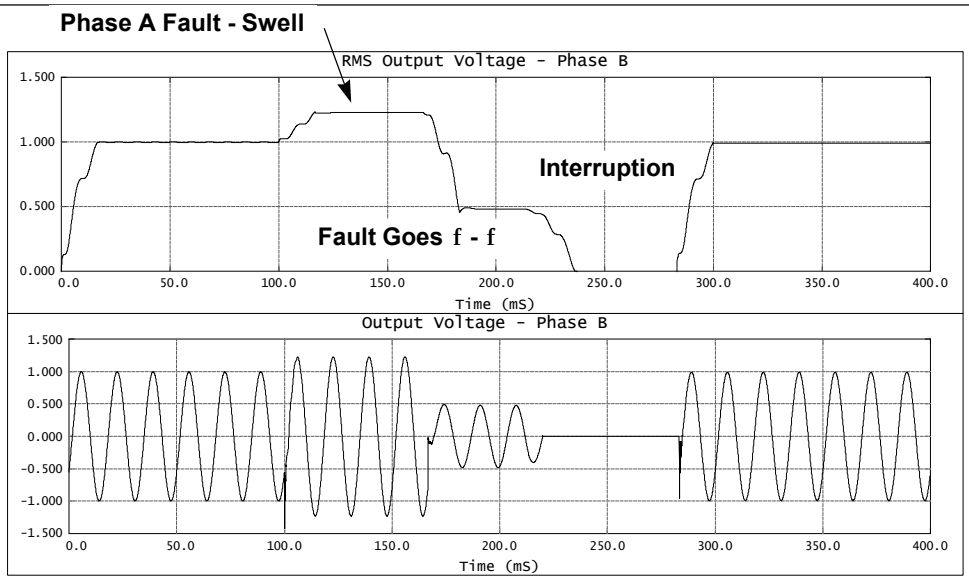

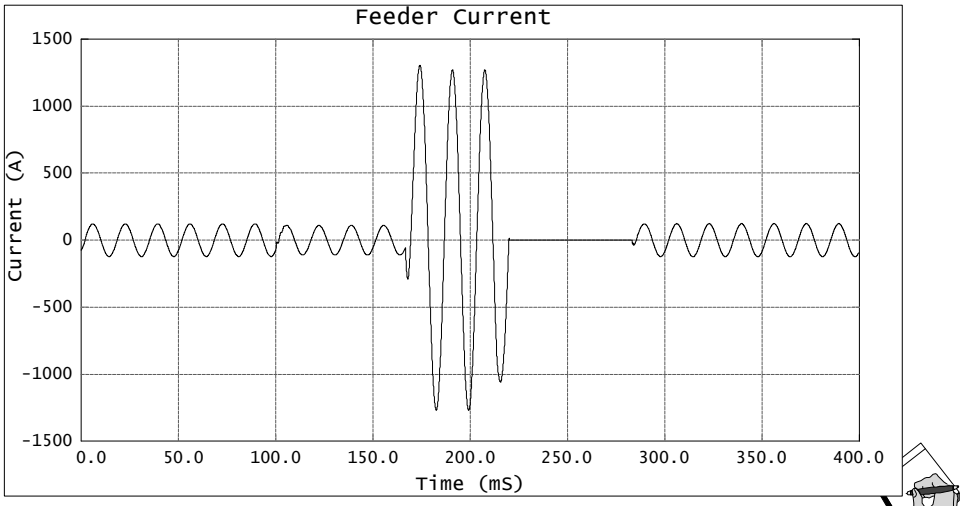

Simulation Results - 10 HP Drive

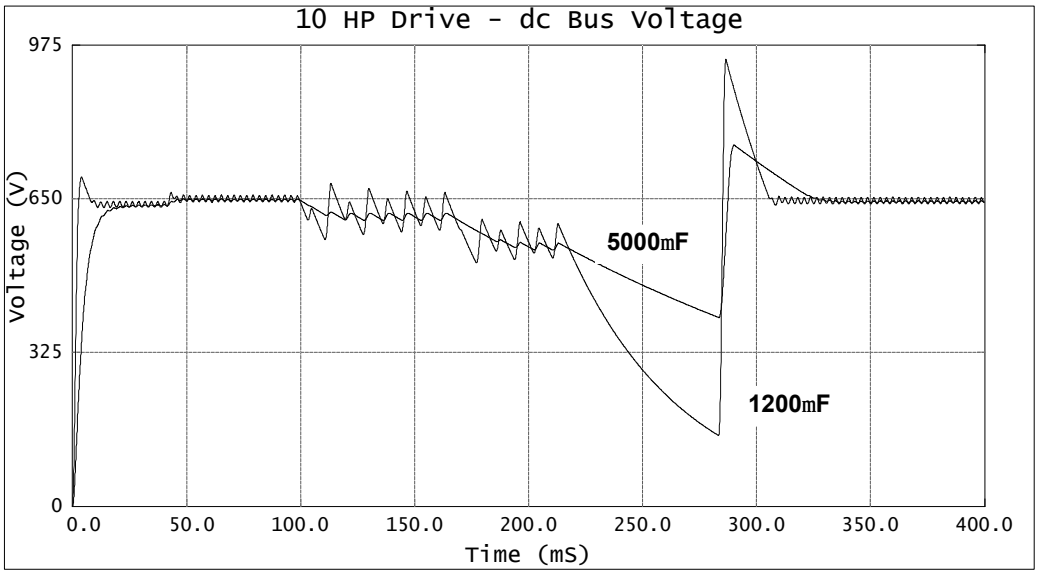

Motor Starting Evaluations

- Motor starting study data requirements:
  - Utility and generator impedances
  - Transformer impedance information
  - Line and cable impedance information
  - Load characteristics
  - Machine data

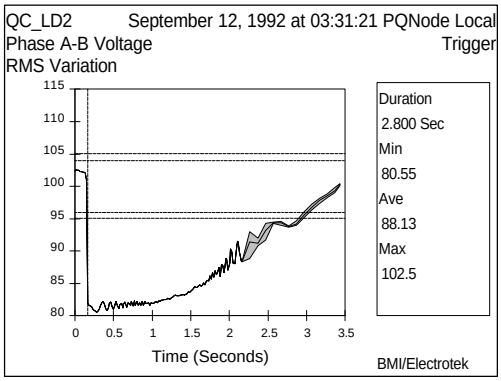

Motors on modern industrial power systems are becoming increasingly large compared to the capacity of the power system. Starting large motors, especially across-the-line, can cause sever disturbances to the motor and any locally connected load. Probably the most important power quality concern related to motor starting is voltage sags (illustrated in Figure 6-10). During motor starting, the voltage level at the motor terminal should be maintained at approximately 80% (or above) of rated voltage for standard NEMA B motors.

A motor starting study can identify voltage sags problems. The voltage profile in the system can be determined using digital computer programs. This method allows equipment locations, likely to experience problems during a motor starting, to be identified.

Simulation and Analysis

- Synchronous and induction motors can draw as must as five to ten times normal current when started across the line.
- A typical digital computer program will determine speed, slip, electrical output torque, load current, and terminal voltage at discrete time intervals from locked-rotor to full speed.

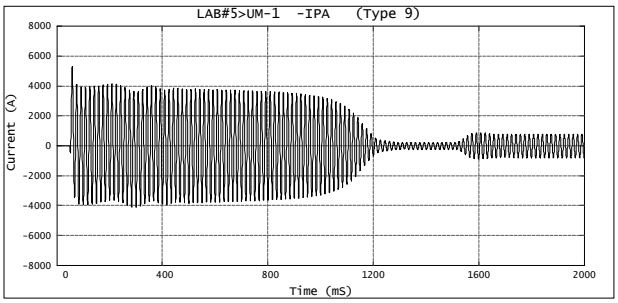

If full voltage starting is used, the sag voltage, in per unit of nominal system voltage is:

$$V_{min_{pu}} = \frac{V_{pu} * kVA_{SC}}{kVA_{LR} * kVA_{SC}}$$

where: V_{pu} = actual system voltage, in per unit of nominal
kVA_{LR} = motor locked rotor kVA
kVA_{SC} = system short circuit kVA at the motor

$$hp = \frac{kVA * pf * \eta}{0.746}$$

where: kVA = motor rating
pf = full load power factor
η = full load efficiency

System Resonance Evaluation

Frequency Scans:

- Determine frequency response characteristic of system
  - Ground all voltage sources
  - Inject 1.0 amp current source (60 Hz) at desired bus
  - Plot magnitude of resultant voltage to determine frequency response

```
BEGIN NEW DATA CASE
FREQUENCY SCAN          60.0    20.0    1500.0
C ...........^.............^.......^.........^
```

Transmission and Distribution *Volume 3, Slide 150*

The application of nonlinear loads results in harmonic currents flowing on the power system. The interaction of these currents with the system impedance determines the voltage distortion levels throughout the system. Simple systems can be analyzed with simple hand calculations or spreadsheets. More complicated systems require computer programs that can solve for the system characteristics at multiple frequencies.

Harmonic voltage distortion is a result of the voltage drop created across the equivalent power system impedance by harmonic currents from nonlinear loads. Once the characteristics of the harmonic sources have been identified, the response of the power system at each harmonic frequency must be developed to determine the impact of the nonlinear load on harmonic voltage distortion.

System Response - Linear Resonance

- The normal flow of harmonics is from the source toward the utility supply.
- The most basic system characteristic is a simple inductance.
- The harmonic current limits for individual customers are based on this assumption.
- Capacitors can significantly affect the impedance vs. frequency characteristic - resonance.

Transmission and Distribution *Volume 3, Slide 151*

$$X_{SC} = \frac{kV_{\phi\phi}^{2}}{MVA_{3\phi}} \qquad L_{SC} = \frac{X_{SC}}{\omega}$$

where:

$kV_{\phi\phi}$ = system rms phase-to-phase voltage (kV)

$MVA_{3\phi}$ = three-phase short circuit capacity (MVA)

X_{SC} = system short circuit reactance (Ω)

L_{SC} = system short circuit inductance (mH)

ω = system frequency (rad/sec = $2*\pi*f_{system}$)

Effect of Capacitors on Frequency Response

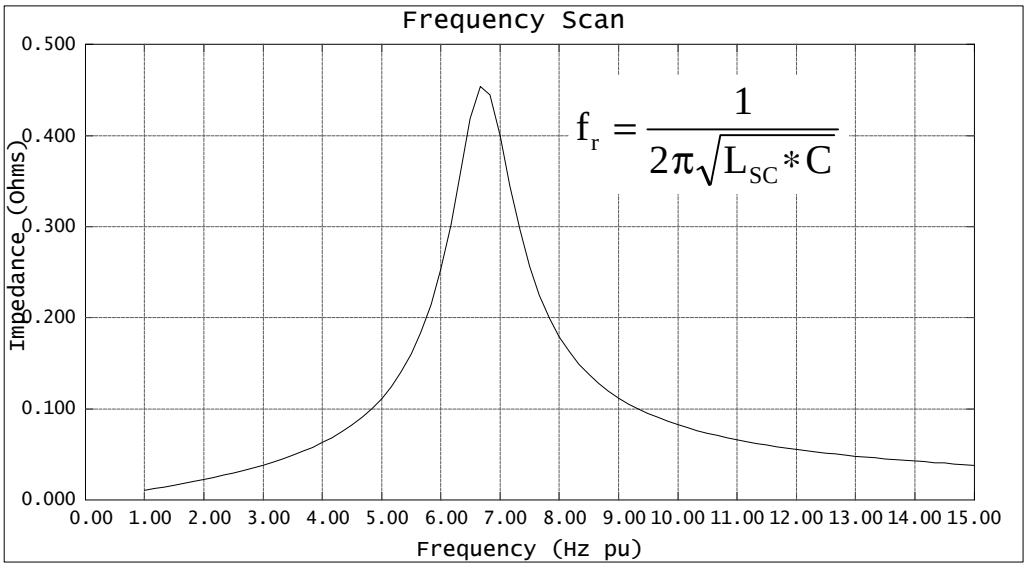

$$f_r = \frac{1}{2\pi\sqrt{L_{SC} * C}}$$

where:

f_r = parallel resonant frequency (Hz)

L_{SC} = system short circuit inductance (mH)

C = capacitor bank capacitance (µF)

Shunt capacitors in the power system dramatically alter the system impedance variation with frequency. Capacitors are one of the most linear elements of the power system and do not create harmonics themselves. However, severe harmonic distortion can sometimes be attributed to their presence.

$$h_r = \sqrt{\frac{X_C}{X_{SC}}} = \sqrt{\frac{MVA_{3\phi}}{MVAr_{3\phi}}} \approx \sqrt{\frac{(kVA_{tx} * 100)}{(kVAr_{3\phi} * Z_{tx_{\%}})}}$$

Impact on Harmonic Current Flow

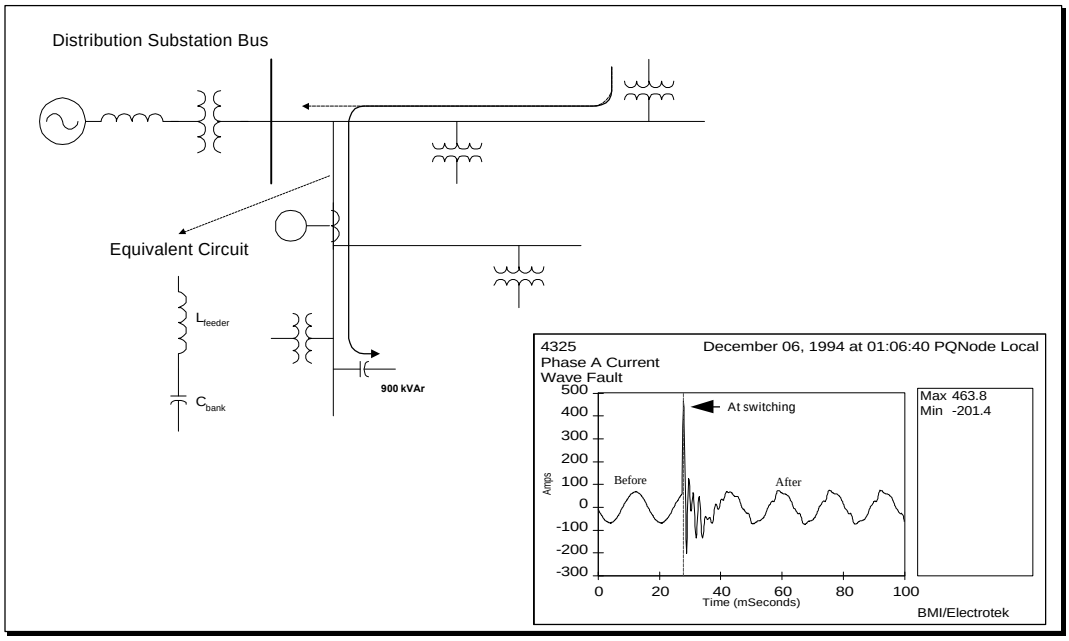

Normal flow of harmonic currents on a distribution system:

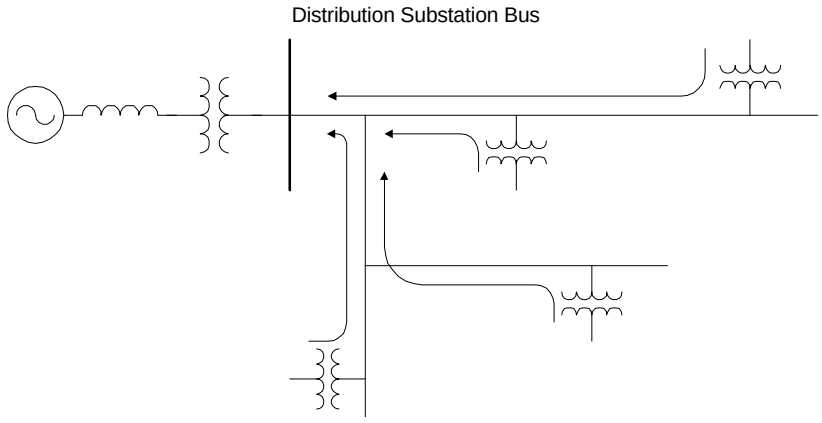

Ferroresonance

- Ferroresonance is a tuned condition in a circuit consisting of a transformer winding and a system capacitance (e.g. cable, capacitor bank).
- Unbalanced switching is required to initiate condition:
  - Single-phase cutouts
  - Fuse blowing
  - Single-phase reclosers
  - Three-phase switch with large pole closing span
  - Open conductor fault in overhead line feeding cable
  - Cable connector or splice opening
  - Manual cable switching to reconfigure a cable circuit during an emergency condition

Transmission and Distribution *Volume 3, Slide 154*

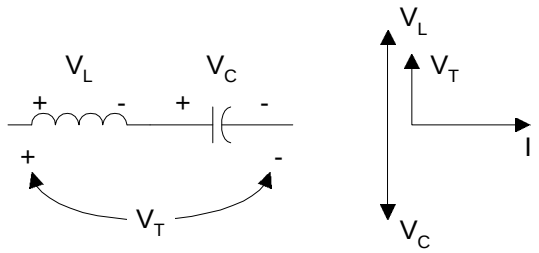

Ferroresonance - continued

- For resonant circuit, capacitive reactance must be equal to transformer magnetizing reactance:
  - Overvoltages produce core saturation causing the magnetizing reactance to vary.

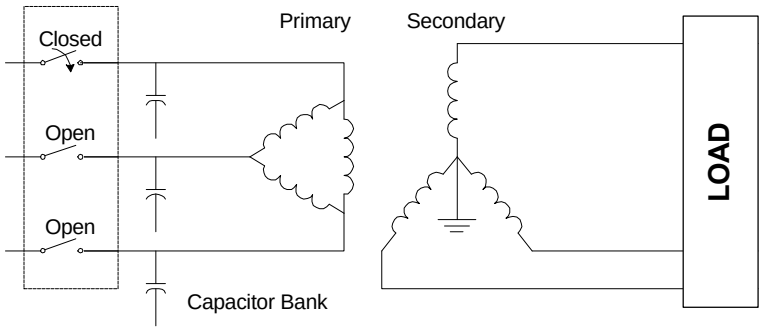

Two additional factors must be satisfied for ferroresonance to occur:

1. The length of the cable between the transformer and open conductor location must have sufficient capacitance to produce excessive ferroresonant voltages.
2. The losses in the circuit and the load on the transformer must be low.

There are several modes of ferroresonance with varying physical and electrical characteristics. Some have very high voltages and currents, while others have voltages close to normal. There may or may not be equipment failures of other evidence of ferroresonance in the electrical equipment. In many cases it may be may be difficult to tell if ferroresonance has occurred, unless there are witnesses or power quality monitoring instruments installed.

Ferroresonance - Waveforms

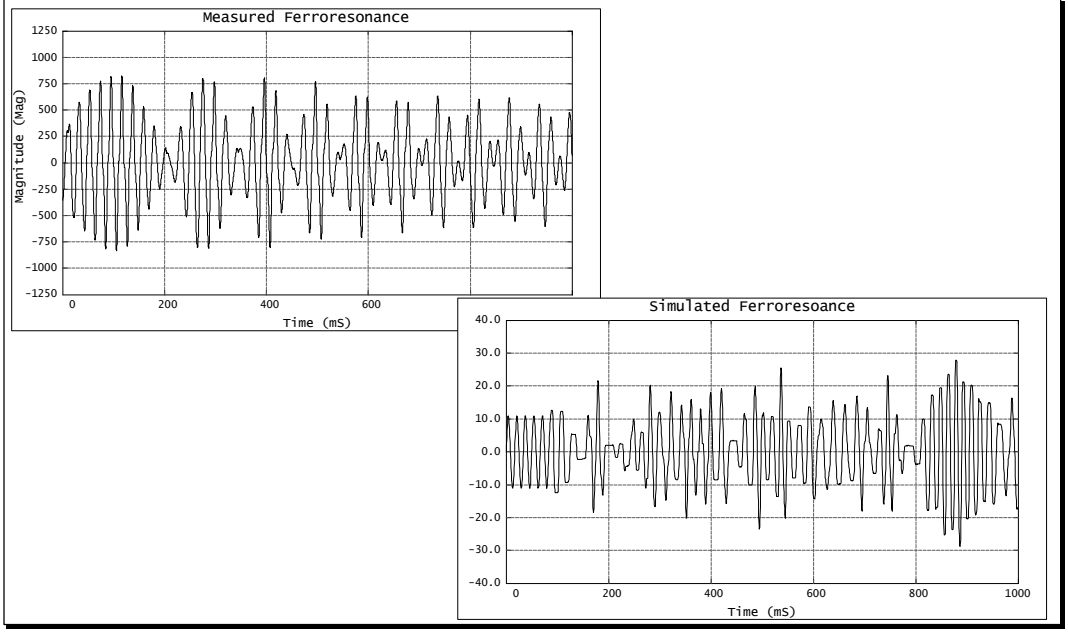

Transmission and Distribution *Volume 3, Slide 156*

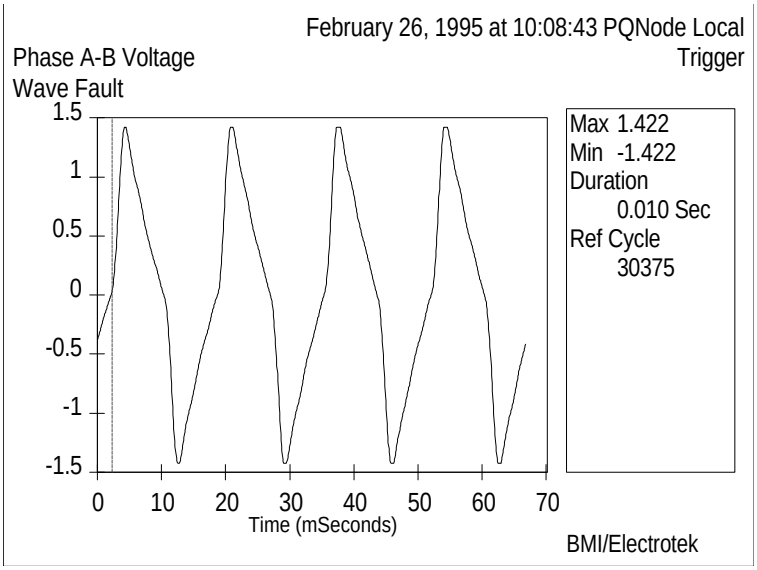

Circuit for Simulation

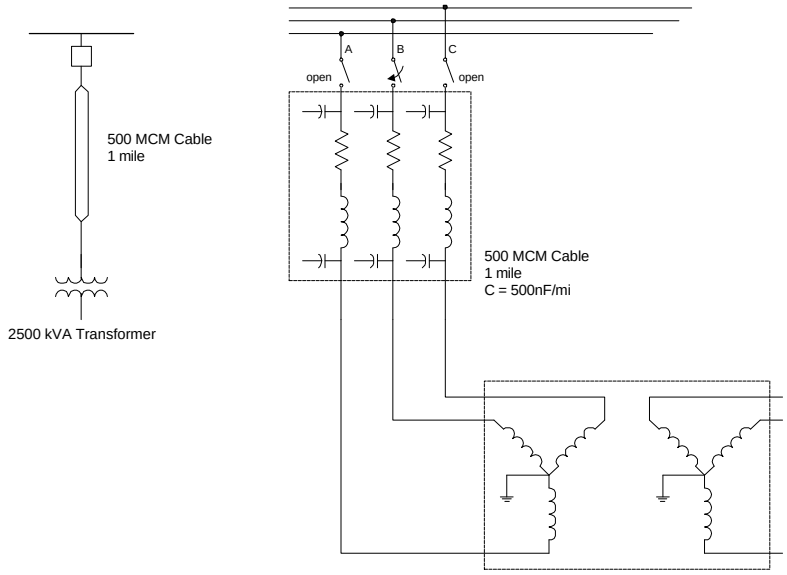

Transmission and Distribution *Volume 3, Slide 157*

One thing common to all types of ferroresonance is that the steel core is driven into saturation, often deeply and randomly (otherwise, it is conventional resonance). As the core goes into a high flux density, it will make an audible noise due to the magnetostriction of the steel and movement of the core laminations. The sound produced is distinctly different and louder than the normal hum of a transformer.

Another reported symptom of the high magnetic field is charring or bubbling of the paint on the top of the transformer tank. This is due to stray flux heating in parts of the transformer where magnetic flux is not expected. Since the core is saturated repeatedly, the magnetic flux will find its way into the tank wall and other metallic parts.

If high voltages accompany the ferroresonance, there could be electrical damage to both the primary and secondary circuits. Surge arresters commonly fail during this condition. Arrester failures are related to the heating of the arrester block, and at times the failures can be catastrophic, with parts being expelled from the arrester housing.

Simulation of Problem and Solutions

- The prediction of ferroresonance from digital simulation requires accurate transformer and cable models.
- The EMTP provides the capability to model that transformer saturation characteristic through the use of the pseudononlinear reactor model (Type 98 or 96).
- Arrester failure may be predicted by including the built-in zinc-oxide arrester model (Type 92).

Transmission and Distribution *Volume 3, Slide 158*

Ferroresonance cannot always be entirely avoided, however, steps can be taken to reduce the probability of occurrence. These include locating fuses or disconnects near the transformer (to minimize capacitance), and using three-phase switches. However, neither of these remedies will provide protection for the broken conductor case. Another common solution involves using grounded-wye / grounded-wye transformers. When each phase is magnetically independent, this connection prevents ferroresonance. However, the common five-legged core design of three-phase padmount transformers is still susceptible to ferroresonance because the phases are magnetically coupled.

Harmonic Evaluations

- EMTP considerations and capabilities:
  - frequency response characteristic - **FREQUENCY SCAN**
  - current injection (type 14 current source)
  - device/component modeling (i.e. PWM ASD)
  - harmonic distortion simulations
- Frequency response
- Nonlinear load representation

Transmission and Distribution *Volume 3, Slide 159*

In general, there are two types of harmonic simulations:

1. ***Frequency Scans:*** The frequency scan is the simplest and most commonly used technique for harmonic analysis. A scan calculates the frequency response characteristic at a particular bus or node. Usually, this is accomplished by injecting one amp into the bus over a range of frequencies and then observing the resultant voltage. The resultant voltage is directly related to the system impedance in ohms. Frequency scan analysis is the best method for identifying resonance conditions. It has also been used a great deal in filter design.
2. ***Distortion Simulations:*** Harmonic distortion simulations use harmonic source characteristics of nonlinear loads to determine current and voltage distortion levels at various points in the system. Harmonic source characteristics (current source) are obtained from field measurements, other simulation programs (Electromagnetic Transients Program - EMTP) or a library of typical waveforms. Distortion simulations are useful for evaluating component duty and determining harmonic limit compliance (i.e. IEEE 519-1992).

Modeling Harmonic Sources

- Harmonics generated by nonlinear device characteristics
- Most devices look like sources of *harmonic currents*
- Voltage distortion caused by system response characteristics

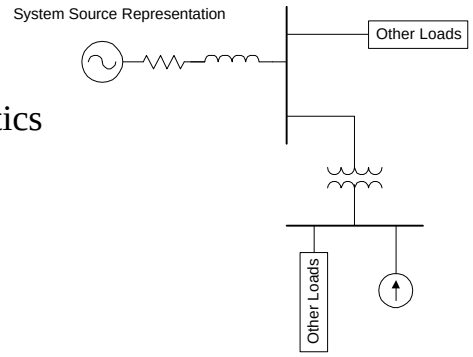

Sequence Components of Harmonics

Harmonic	Phase Sequence
1	+
2	-
3	0
4	+
5	-
6	0
7	+
8	-
9	0
...	

```
/SOURCE
C
C <-------- 200 HP Adjustable-Speed Drive (dc Drive, three-phase)
C
C  Harmonic Current Source for 200 HP DC Drive
C  IFL = 240 Amps  I5 = 33.6%, I7 = 1.6%,  I11 = 8.7%,  I13 = 1.2%
C
C <--Bus<I<-----Ampl<-----Freq<----Phase<-------A1<------T1><---Tstart<----Tstop
14200HPA-1     339.4      60.0     -75.0                      50.0E-06     9999.
14200HPA-1       4.1     180.0      28.0                      50.0E-06     9999.
14200HPA-1     114.0     300.0     156.0                      50.0E-06     9999.
14200HPA-1       5.4     420.0      29.0                      50.0E-06     9999.
14200HPA-1      29.5     660.0      49.0                      50.0E-06     9999.
14200HPA-1       4.1     780.0      54.0                      50.0E-06     9999.
14200HPA-1      15.3    1020.0     -57.0                      50.0E-06     9999.
14200HPA-1       4.4    1140.0     -46.0                      50.0E-06     9999.
C .....^.^.........^.........^.........^.........^.........^........^..........^.........^
C
C <--Bus<I<-----Ampl<-----Freq<----Phase<-------A1<------T1><---Tstart<----Tstop
14200HPB-1     339.4      60.0     165.0                      50.0E-06     9999.
14200HPB-1       4.1     180.0      28.0                      50.0E-06     9999.
14200HPB-1     114.0     300.0     -84.0                      50.0E-06     9999.
14200HPB-1       5.4     420.0     -91.0                      50.0E-06     9999.
14200HPB-1      29.5     660.0     169.0                      50.0E-06     9999.
14200HPB-1       4.1     780.0     -66.0                      50.0E-06     9999.
14200HPB-1      15.3    1020.0      63.0                      50.0E-06     9999.
14200HPB-1       4.4    1140.0    -166.0                      50.0E-06     9999.
C .....^.^.........^.........^.........^.........^.........^........^..........^.........^
C
C <--Bus<I<-----Ampl<-----Freq<----Phase<-------A1<------T1><---Tstart<----Tstop
14200HPC-1     339.4      60.0      45.0                      50.0E-06     9999.
14200HPC-1       4.1     180.0      28.0                      50.0E-06     9999.
14200HPC-1     114.0     300.0      36.0                      50.0E-06     9999.
14200HPC-1       5.4     420.0     149.0                      50.0E-06     9999.
14200HPC-1      29.5     660.0     -71.0                      50.0E-06     9999.
14200HPC-1       4.1     780.0     174.0                      50.0E-06     9999.
14200HPC-1      15.3    1020.0    -177.0                      50.0E-06     9999.
14200HPC-1       4.4    1140.0      74.0                      50.0E-06     9999.
C .....^.^.........^.........^.........^.........^.........^........^..........^.........^
C
C <-----------------------------------------------Output Request---------------
C
/OUTPUT
C
C Bus1->Bus2->Bus3->Bus4->Bus5->Bus6->
   12_5A 12_5B 12_5C
   XFMRA XFMRB XFMRC
C .....^.....^.....^.....^.....^.....^
BLANK ENDS BRANCH
BLANK ENDS SWITCH
BLANK ENDS SOURCE
BLANK ENDS OUTPUT
BLANK ENDS PLOT
BEGIN NEW DATA CASE
BLANK END OF ALL DATA CASES
```

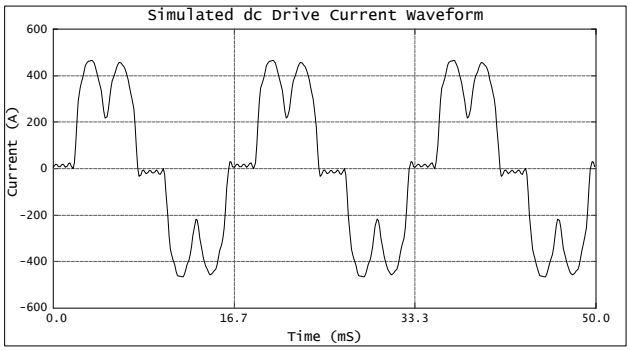

Important Concepts

- Modeling Considerations
- Application of IEEE 519-1992

Point of Common Coupling

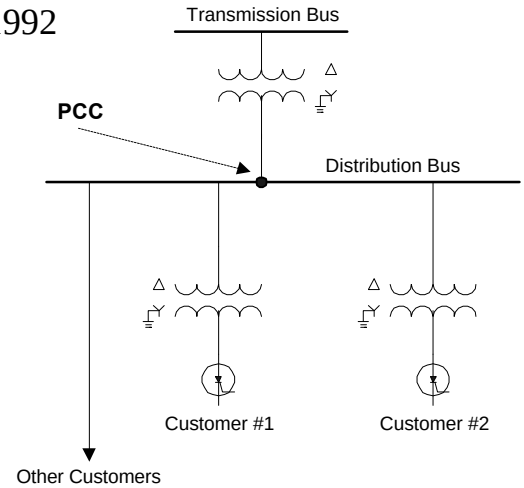

Transmission and Distribution *Volume 3, Slide 163*

Many harmonic studies are completed using a single-phase (positive sequence) representation. However, there are several cases when the user must extend the model to a full three-phase representation:

1. Single-phase of unbalanced harmonic sources - the imbalance can only be represented with a three-phase model.
2. Harmonic current cancellation - when there are multiple harmonic current sources, a certain amount of cancellation will occur. Determining the level of cancellation requires modeling the current sources with both magnitude and phase angle information, and modeling the system using a three-phase representation.
3. Single-phase capacitor banks - balanced positive sequence models are not sufficient when there are single-phase capacitor banks on the system.
4. Telephone interference - the influence of residual harmonic current is the critical factor, therefore, the system and harmonic source imbalance must be fully modeled in order to accurately determine the residual currents.
5. Triplen harmonic voltage sources - a three-phase model is required to accurately represent the high zero sequence impedance.

Evaluation of Solutions

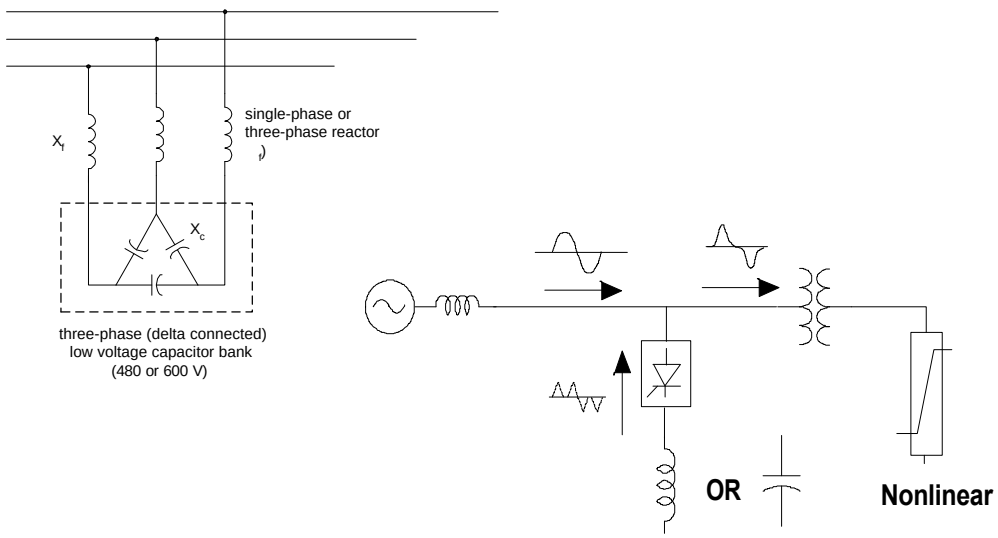

Transmission and Distribution *Volume 3, Slide 164*

The passive shunt filter works by short-circuiting the harmonic currents as close to the source of distortion as practical. This keeps the currents out of the supply system and alters the resonant frequency of the system. This is the most common type of filtering applied because of economics and that it also tends to smooth the load voltage as well as remove the current.

Active filters work by electronically supplying the harmonic component of the current into a nonlinear load.

$$h_{notch} = \sqrt{\frac{X_{C_Y}}{X_f}} = \sqrt{\frac{\left(kV^2_{\phi\phi} \big/ MVAr_{3\phi} \right)}{X_f}}$$

Altering Current Flow with Filters

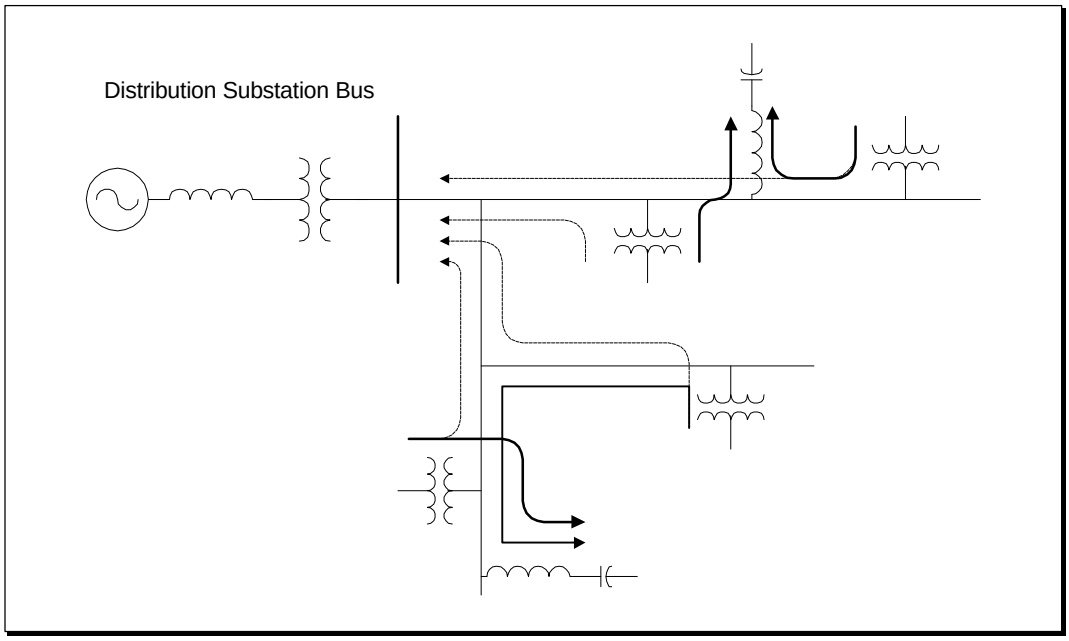

Transmission and Distribution *Volume 3, Slide 165*

The question often arises concerning what to do about widely dispersed, small sources of harmonic currents that cause excessive voltage distortion on medium voltage distribution systems. The basic problem is that the path taken by these currents is too long, either electrically so that they cause excessive voltage distortion or physically so that they cause communications interference. Therefore, the basic solution is to shorten the path for the offending harmonic currents so that they do not travel all the way back to the substation, as is their general tendency.

The general idea is to distribute a few filters tuned to the principal offending harmonics well out toward the ends of the feeder. This shortens the average path for the harmonic currents, reducing the opportunity for telephone interference and reducing the harmonic voltage drop in the lines. This keeps the voltage distortion on the feeder to a minimum. With the voltage distortion at the ends of the feeder "nailed down" by the short-circuiting action of the filters, it is more difficult for the voltage distortion to rise above limits elsewhere.

Transformer Energizing Case Study

Simplified Oneline Diagram:

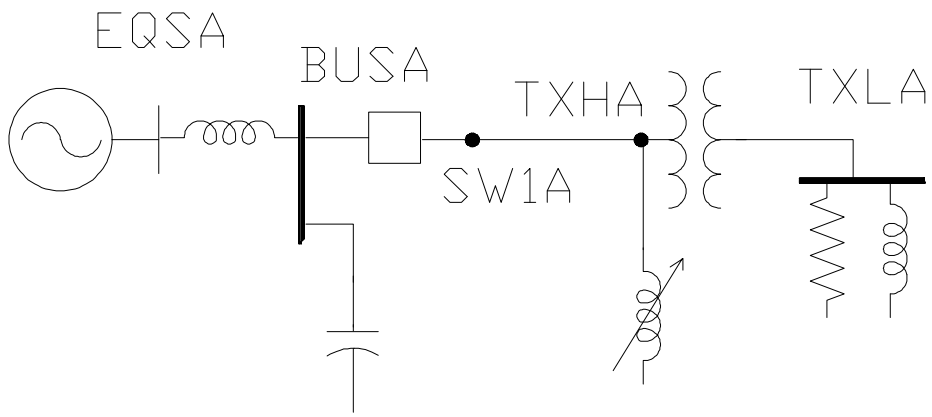

TXINRUSH.DAT

Source Impedance Representation

```
C Equivalent Bus and Line Impedance
C 11.54 uF/phase-to-ground Capacitor Bank(0.9 MVAr) on Supply Bus
C
C <---Nodes--><---Refer--><-Ohms<---mH<---uF<----------------------------Output
C Bus1->Bus2->Bus3->Bus4-><----R<----L<----C                                 V
  EQSA  BUSA                    10.000
  BUSA  NEUT                          11.540
  BUSA  SW1A              0.30  2.0000
C .....^.....^.....^.....^.....^.....^.....^xxxxxxxxxxxxxxxxxxxxxxxxxxxxxxxxxx^
```

$$L_{source} = \frac{14.4\,\text{kV}^2}{55\,\text{MVA}} = 3.77\,\Omega = 10\,\text{mH}$$

$$C_{source} = \frac{14.4\,\text{kV}^2}{0.9\,\text{MVAr}} = 230.4\,\Omega = 11.5\,\mu\text{F}$$

Step-down Transformer Representation

```
C  500 KVA, 14400/480 V, ZTx = 10.0% @85 DEG, CORE LOSS =5 KW
C
C Transformer (Saturable transformer without magnetizing branch)
C
C TRANSFORMER <--Ref<----><--Iss<--Phi<-Name<-Rmag<---------------------------O
  TRANSFORMER                          XFMA
C ...........^.....^xxxxxx.....^.....^.....^.....^xxxxxxxxxxxxxxxxxxxxxxxxxxxx^
C
C <---CURRENT--><--FLUX-------->
           9999
C .............^...............^
C
C <---Nodes--><----------><-Ohms<---mH<---kV
C <-Bus1<-Bus2<----------><---Rk<---Lk<-Volt---------------------------------->O
01TXHA                    1.8061 55.00 14.40
02TXLA                    2.E-03 0.061  .480
C .....^.....^xxxxxxxxxxxx.....^.....^.....^xxxxxxxxxxxxxxxxxxxxxxxxxxxxxxxxxx^
C
C
C Core Losses (5 kW - 14.4 kV)
C
C <---Nodes--><---Refer--><-Ohms<---mH<---uF<---------------------------------O
C Bus1->Bus2->Bus3->Bus4-><----R<----L<----C                                  V
  TXHA                    41472.
C .....^.....^.....^.....^.....^.....^.....^xxxxxxxxxxxxxxxxxxxxxxxxxxxxxxxxxx^
```

Transformer Impedance Calculation

$$Z_{HS} = \frac{\left(14.4/\sqrt{3}\right)^2}{\left(0.50/3\right)} = 414.7\Omega * \frac{10\%}{2} = 20.7\Omega \Rightarrow \quad L_{HS} = \frac{20.7\Omega}{2*\pi*60} = 55.0\text{mH}$$

$$Z_{LS} = \frac{\left(0.480/\sqrt{3}\right)^2}{\left(0.50/3\right)} = 0.461\Omega * \frac{10\%}{2} = 0.023\Omega \Rightarrow \quad L_{LS} = \frac{0.023\Omega}{2*\pi*60} = 0.061\text{mH}$$

$$R_{core} = \frac{\left(14.4/\sqrt{3}\right)^2}{\left(0.005/3\right)} = 41472\Omega$$

Transformer Saturation Characteristic

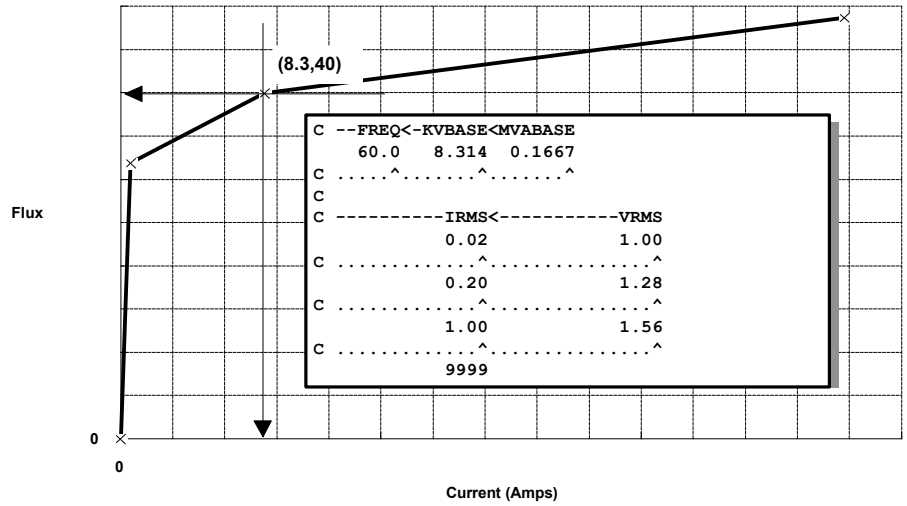

Transformer Saturation - cont

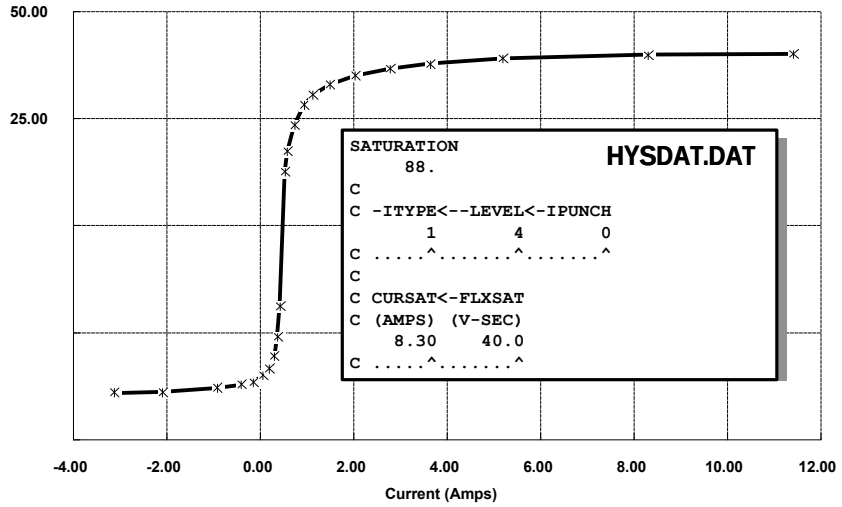

Transformer Energizing Current

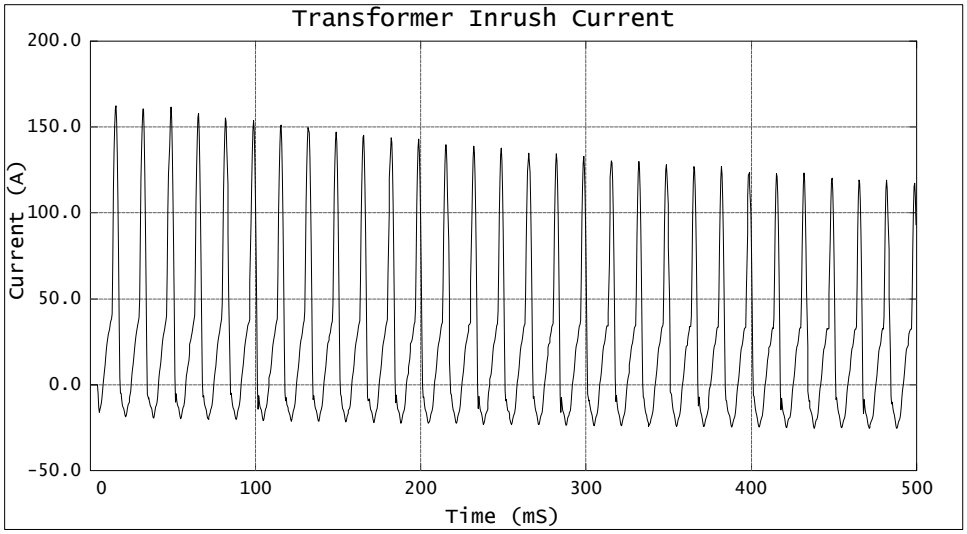

Harmonic Current vs Time

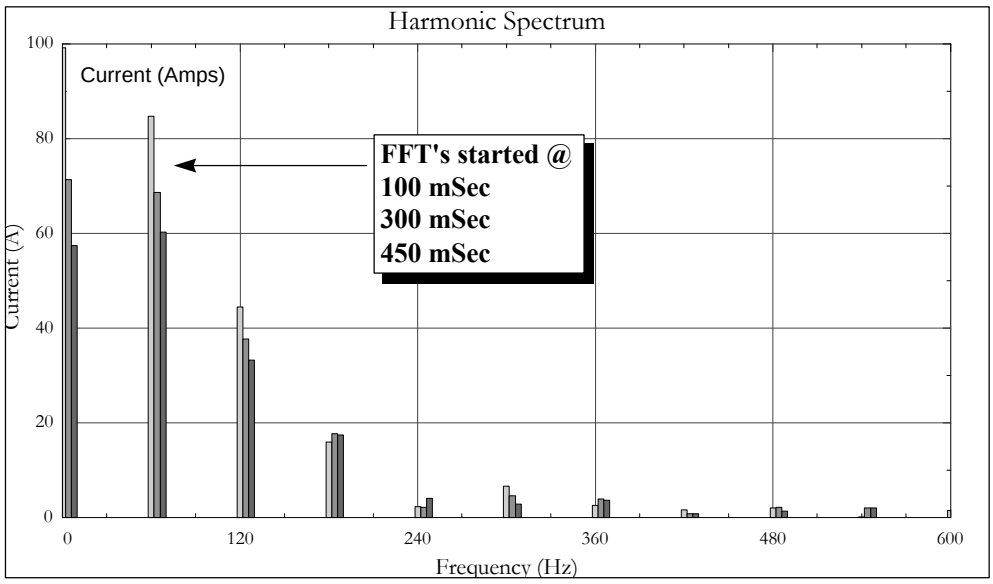

Transmission and Distribution *Volume 3, Slide 173*

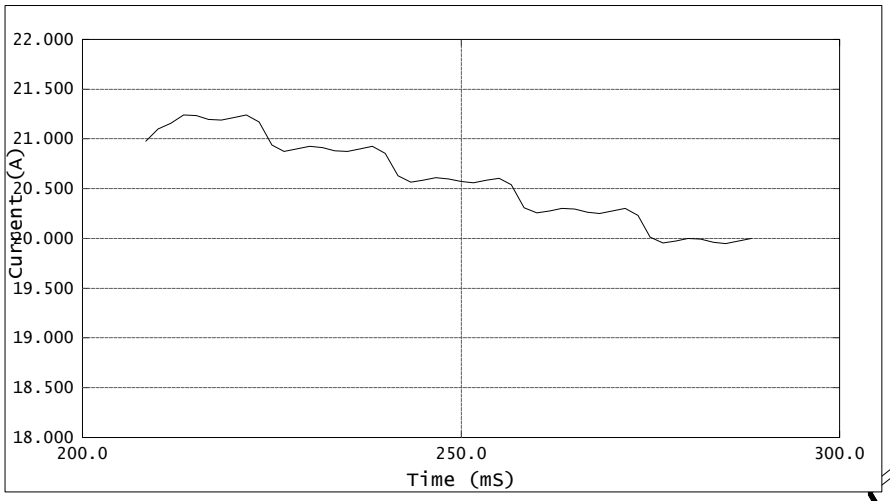

Result of Sliding FFT in TOP

Transmission Line Energizing Case Study

Simplified Oneline Diagram:

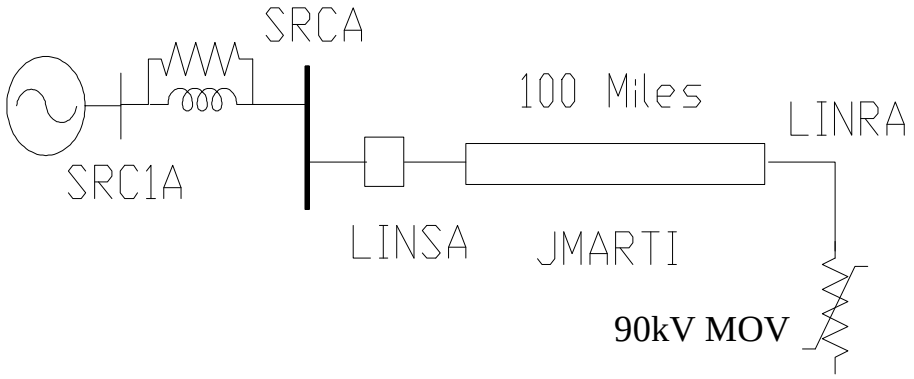

ENERLINE.DAT

Line Energizing - Source Impedance

```
C Equivalent Source Impedance
C
C <---Nodes--><---Refer--><-Ohms<---------mH
C <-Bus1<-Bus2<-Bus3<-Bus4<----R<----------L
51 SRC1A  SRCA             0.519       8.259
C .....^.....^.....^.....^.....^...........^  Zero Sequence
52 SRC1B  SRCB             1.104      17.572
C .....^.....^xxxxxxxxxxxx.....^...........^  Positive Sequence
53 SRC1C  SRCC
C .....^.....^xxxxxxxxxxxx.....^...........^
C
C Surge Impedance (simulate system damping)
C
C <---Nodes--><---Refer--><-Ohms<---mH<---uF<----------------------------Output
C Bus1->Bus2->Bus3->Bus4-><----R<----L<----C                                 V
   SRC1A  SRCA             400.0
   SRC1B  SRCB             400.0
   SRC1C  SRCC             400.0
C .....^.....^.....^.....^.....^.....^.....^xxxxxxxxxxxxxxxxxxxxxxxxxxxxxxxxxxxx^
```

*400 Ω approximate surge impedance of one 115kV line

Line Energizing - JMarti Representation

```
BEGIN NEW DATA CASE
LINE CONSTANTS
LINE-MODEL         FD-LINE   QREAL     LOG       0.1       10        8
ENGLISH                                2
C                I
C                X        R
C P    S       R T        E      D       H       V       V       S     A       N
C H    K       E Y        A  CM  I   M   O    M  T    M  M   CM  E DEG L       B
C A    I       S P        C  IN  A  FT   R   FT  O   FT  I   IN  P     P       U
C S<---N<------I-E<-------T------M<------I<------W<------D<------A<----H<----> N
  0  0.5  3.4468 4           0.349   -8.00   100.0   100.0
  0  0.5  3.4468 4           0.349    8.00   100.0   100.0
C ^....^.......^.^........^......^.......^.......^.......^.......^.....^xxxxxx.^
  1  0.5  0.0523 4           1.525    14.3    84.2    84.2
  2  0.5  0.0523 4           1.525    18.6    67.2    67.2
  3  0.5  0.0523 4           1.525    14.3    52.2    52.2
C ^....^.......^.^........^......^.......^.......^.......^.......^.....^xxxxxx.^
BLANK END OF CONDUCTOR DATA
C
C <--Rho<--Fmatrix<----------------------><-----Len<-Iseg
   55.28     5000.                                100.0     0
C .....^.........^xxxxxxxxxxxxxxxxxxxxxxxx........^.....^
C
.NODES              SEN_A     REC_A     SEN_B     REC_B     SEN_C     REC_C
C xxxxxxxxxxxxxxxx.....^xxxx.....^xxxx.....^xxxx.....^xxxx.....^xxxx.....^
BLANK END OF FREQUENCY DATA
BLANK END OF LINE CONSTANTS DATA CASE
```

Line Energizing - 90kV MOV Arrester

```
C 90 kV MOV (at end of transmission line)
C Single-Exponential No-Gap Zinc Oxide Surge Arrester
C
C             <--REFER -->
C <-BUS1<-BUS2<-BUS3<-BUS4
92  AR1A                              5555.                                   4
C .....^.....^.....^.....^............5555.....................................O
C
C ------------------VREF<-------------------VFLASH<-------------------VZERO
                 169000.                     -100.
C ....................^.......................^.......................^
C ------------------COEF<-------------------EXPON<-------------------VMIN
                   500.0                      30.0                      0.5
C ....................^.......................^.......................^
                    9999
```

Note:

MSSPL = 169kV @ 500 Amps

Example Transmission Line Energizing

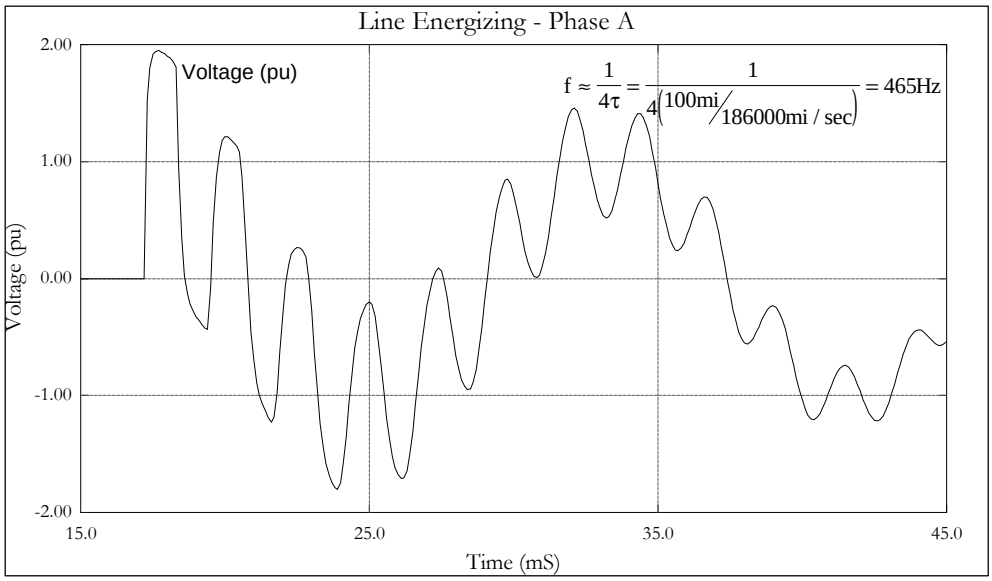

Transmission and Distribution *Volume 3, Slide 178*

Ferroresonance Case Study

Simplified Oneline Diagram:

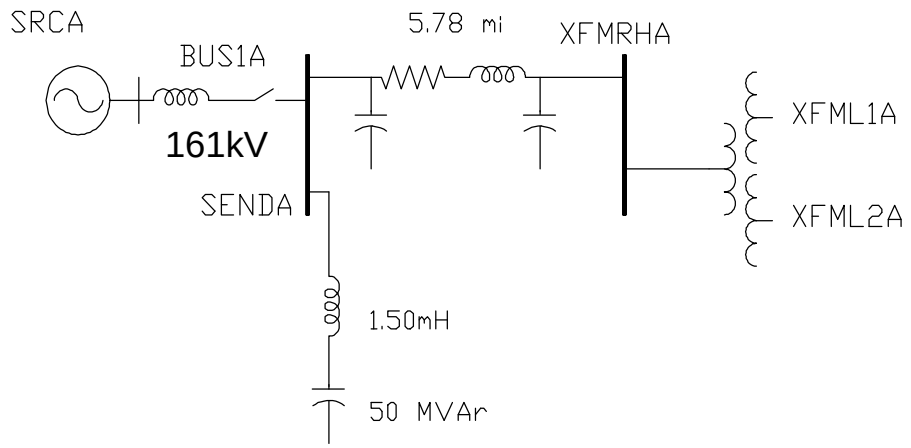

FERRORES.DAT

Ferroresonance Case Study - PI Ckt Line

```
/BRANCH
C
C 5.78 Mile, 1192.5 ACSR Transmission Line - PI Equivalent Branch
C
$VINTAGE,  1
C <---Nodes--><----------><----------Ohms<--------------mH<-------------uF
C <-Bus1<-Bus2<---Ph A---><-----------R11<-------------L11<------------C11
 1SENDSAXFMRHA                      2.6007          18.083          0.0706
C .....^.....^xxxxxxxxxxxx...............^...............^...............^
C <-Bus1<-Bus2<---Ph B---><-----------R21<-------------L21<------------C21
 2SENDSBXFMRHB                      1.1232          6.0505        -0.00932
C .....^.....^xxxxxxxxxxxx...............^...............^...............^
C <---------------------><-----------R22<-------------L22<------------C22
                                    2.6007          18.083          0.0706
C .....^.....^xxxxxxxxxxxx...............^...............^...............^
C <-Bus1<-Bus2<---Ph C---><-----------R31<-------------L31<------------C31
 3SENDSCXFMRHC                      1.1232          6.0505        -0.00932
C .....^.....^xxxxxxxxxxxx...............^...............^...............^
C <---------------------><-----------R32<-------------L32<------------C32
                                    1.1232          6.0505        -0.00932
C .....^.....^xxxxxxxxxxxx...............^...............^...............^
C <---------------------><-----------R33<-------------L33<------------C33
                                    2.6007          18.083          0.0706
C .....^.....^xxxxxxxxxxxx...............^...............^...............^
$VINTAGE,  0
C
```

Ferroresonance Case Study - Transformer

```
C 30 MVA Transformer
C
C TRANSFORMER <--Ref<---><--Iss<--Phi<-Name<-Rmag
  TRANSFORMER             0.6184 603.9XFMERA0.43E6
C ...........^.....^      .....^.....^.....^.....^
C <---CURRENT--><--FLUX-------->
          0.6184          603.96
         13.7606          791.19
         35.0421          809.31
C .............^...............^
             9999
C <---Nodes--><----------><-Ohms<---mH<---kV
C <-Bus1<-Bus2<----------><---Rk<---Lk<-Volt---------------------------------->O
01XFMRHAXFMRHB            1.3108 77.69 161.0
02XFML1A                  0.0431 2.543 7.620
03XFML2A                  0.0424 2.496 37.62
C .....^.....^xxxxxxxxxxxx.....^.....^.....^xxxxxxxxxxxxxxxxxxxxxxxxxxxxxxxxxxx^
```

Example Ferroresonance

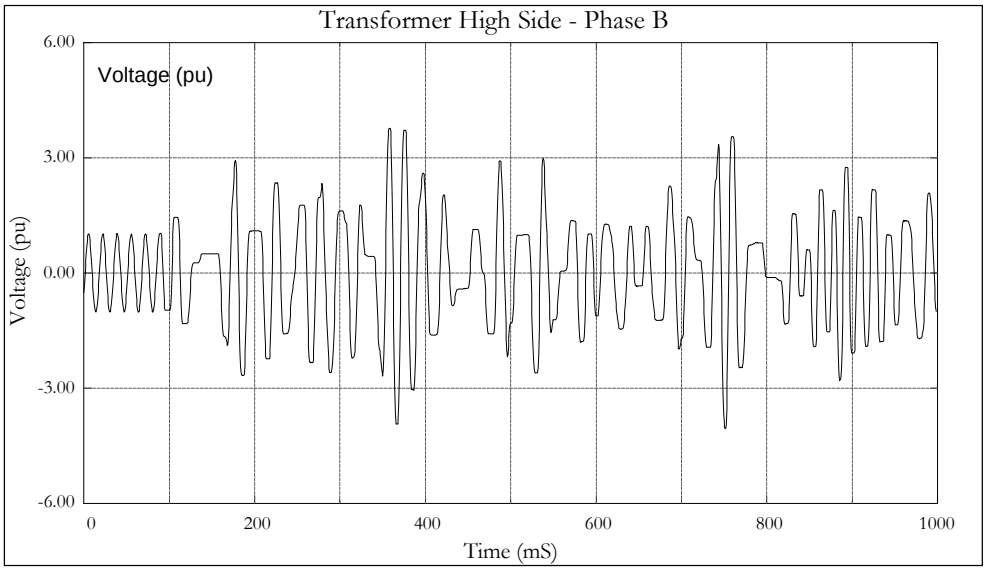

Current Limiting Fuse Case Study

- Current Limiting Fuse Characteristics:
  - Commonly used at distribution levels
    - Low cost
    - Easy installation
    - Reliable
    - Fast response
  - Nonlinear characteristics
    - Interrupt a unmature current
    - Non-linear characteristic after melting
    - Produce a special type of transient

CL Fuse Model

- Empirical model of current limiting fuse:

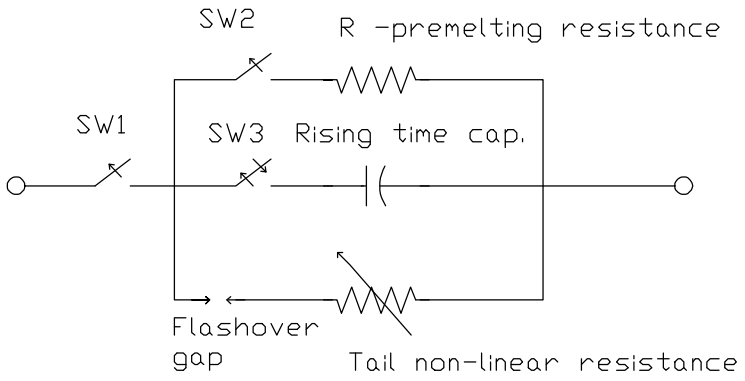

CL Fuse Model - cont

- Parameters required for EMTP simulation:
  - R1: premelting resistance
  - C1: rise-time capacitor
  - R2: tail non-linear resistance characteristics, V-I curve. This needs to be obtained either from a test or from manufacturer
  - I_{rated} - fuse current rating, A
  - V_{rated} - fuse voltage rating, V
  - I^2*t-minimum let through energy of the fuse [A^2][s]
  - V_{trans}-the flashover voltage of the gap in series with R2

Transmission and Distribution *Volume 3, Slide 185*

CL Fuse Module

```
C ******************************************************************************
C *           A SINGLE PHASE DISTRIBUTION FUSE MODULE (lt112093)
C *                  ( Ref. Mack Grady: "DPQ Modeling Guideline")
C NCLUED 1PHFUSE FUSE1A,FUSE2A,IRATED,ACRMLT,PRERES,RISCAP,VTRANS,?   ; 1PH FUSE
C ******************************************************************************
ARG                                                          - ; ARGUMENTS
FUSE1A,FUSE2A,IRATED,ARCMLT,PRERES,RISCAP,VTRANS,?             ; CON.BUS AND PARA.
NUM                                                          - ; NUMERICAL
              IRATED,ARCMLT,PRERES,RISCAP,VTRANS               ; PARA.
DUM                                                          - ; DUMMY
NODE1A, NODE2A, NODE3A,                                      - ; DUM1
SIGL1A, SIGL2A, SIGL3A,                                      - ; DUM2
VFUSEA, IMILTA, ISQURA, ISQUTA                                 ; DUM3
/TACS
C initial conditions
77SIGL1A  +0.5
77SIGL2A  -0.5
C current measuring
91FUSE1A
C voltage measuring
90NODE3A
90FUSE2A
98VFUSEA  =NODE3A-FUSE2A
93NODE1A
93NODE2A
C actual current checking against rated current
98IMILTA  =FUSE1A*(ABS(FUSE1A).GT.IRATED)
C i*i
98ISQURA  =IMILTA*IMILTA
C calculated I*I*t=int{i(t)*i(t)dt}
C OUTPUTCDs<-IN1>xs< IN2>xs< IN3>xs< IN4>xs< IN5>x<GAIN><D0  ><D1  ><CNTL><valu>
98ISQUTA58+ISQURA                                     1.0   0.0   1.0   PLUS1
C control signal generation
98SIGL1A  =+0.5-(ISQUTA.GT.ARCMLT)
98SIGL2A  = MINUS(SIGL1A)-(ABS(VFUSEA).GT.VTRANS)
98SIGL3A  = MINUS(((ABS(VFUSEA).GT.VTRANS).OR.(NODE2A.EQ.0)).AND.(NODE1A.EQ.0))
C  TACS output
33ISQUTA      SIGL1A      SIGL2A      SIGL3A      VFUSEA
```

CL Fuse Module - cont

```
/BRANCH
C pre-melting resistance of the fuse
C <-Bus1<-Bus2<-Bus3<-Bus4<----R<----L<----C                                    V
  NODE1AFUSE2A            PRERES
C rising time capacitance of the fuse
  NODE2AFUSE2A                          RISCAP
C non-linear resistance of the fuse
C <BUS1><BUS2><BUS3><BUS4><VTR ><TDLY><JUMP>                                    O
99NODE3AFUSE2A            VTRANS1.0E-6     9
C <CURRENT     ><VOLT          >
           30.0          8920.0
          300.0          9500.0
         1260.0         12100.0
         2360.0         15800.0
         3040.0         19220.0
         3300.0         24130.0
         4150.0         29800.0
         5120.0         33500.0
         8110.0         35000.0
           9999
/SWITCH
C connection switch, SW1, open when I^2*t>ARCMLT when i=0
C <BUS1><BUS2><  VIG   ><  IHOLD >xxxxxxxxxxxxxxxxxxxxCLOSEDxxxxSPARK>CLAMP>xxEO
12FUSE1ANODE3A                                      CLOSED    SIGL1A        ?
C pre-melting R switch, SW2, a forced pre-matural i interrupt when I^2*t>ARCMIL
C <BUS1><BUS2><  VIG   ><  IHOLD ><TDEION  >xxxxxxxxxxCLOSEDsame<GRID><O/C >xxEO
13NODE3ANODE1A                                      CLOSED          SIGL1A   ?
C rising time C switch, SW3, closed when ARCMLT is reached by SIGL2A,
C open when Vfuse>Vtrans by SIGL2A, and kept open by SIGL3A=-1 overides SIGL2A
C <BUS1><BUS2><  VIG   ><  IHOLD >xxxxxxxxxxxxxxxxxxxxCLOSEDxxxxSPARK>CLAMP>xxEO
12NODE3ANODE2A                                                SIGL2ASIGL3A   ?
/ENDMODULE
$EOF
```

CL Fuse Operation

- Sample system:

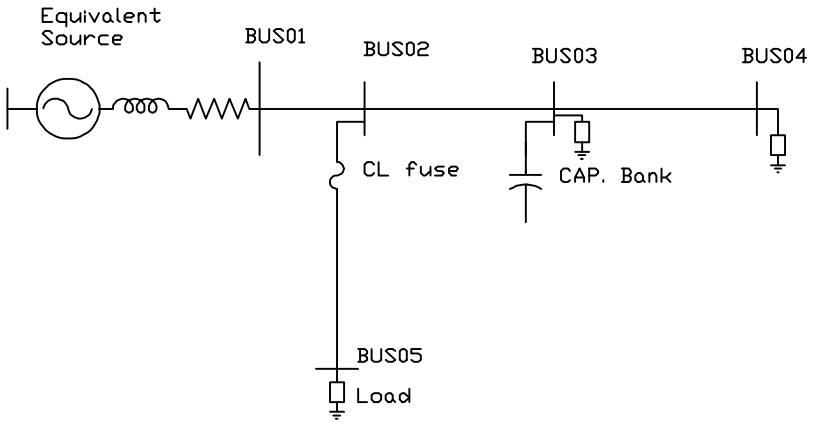

CL Fuse - EMTP Data Case

```
C ******************************************************************************
C                     A fuse operation transient due to a SLGF
C                                  Date: 11/23/93
C                           Electrotek Concepts, Inc.
C                               Knoxville TN 37932
C clf0.dat
C ******************************************************************************
C A feeder section btwn. bus02 and bus05 is protected by the fuses of
C       Rated current       = 100A,
C       Rated voltage       = 15kV
C       "Let through I^2*t" = 15000 [A^2][s]
C ------------------------------------------------------------------------------
$PREFIX C:\ETK\MODULE\INCFILE\
$SUFFIX .INC
BEGIN NEW DATA CASE
C C---dt<---Tmax<---Xopt<---Copt<-Epsiln<-Tolmat<-Tstart
15.43E-6  0.0500      60
C CIprnt<--Iplot<-Idoubl<-Kssout<-Maxout<---Ipun<-Memsav<---Icat<-Nenerg<-Iprsup
   -1500       1       0       0       1       0       0       2       0       0
TACS HYBRID        1
C ==============================================================================
C                          ****  Feeder Circuit  ****
C
C 2400MVA, 27.4kV Source at BUS01 by 3PHRDS
C NCLUDE 3PHRDS TERML, R0,   L0,   R1,   L1,  DAMPR, VPEAK, TSTRT, TSTOP ; COM
$INCLUDE 3PHRDS BUS01,.0375,.3754,.0313,.3128,  80., 22345.,-1.0,  9999  ;
C
C ------------------------------------------------------------------------------
C 15.8kV L-N, feeder sections, by PI-sections, 3PHLIN
C        MODULE BUS-1, BUS-2,   Rs,     Xs,     Cs,     Rm,     Xm,     Cm,    ; No.  Type
Length(1000FT)
$INCLUDE 3PHLIN BUS01, BUS02, 0.0950, 0.2140, 1.4E-3, 0.0396, 0.0948, -3.E-4   ;  ,  AR336
0.972
C
```

CL Fuse - EMTP Data Case - cont

```
C >>>>>>>>
C The fuses inserted at BUS02 to protect feeder section between BUS02-BUS05
C        module  <bus>,<bus>,<Ir  >,I^2*t, <Rpre>,<Cris>,<Vtr >,?,@ ; 3PH FUSE
$INCLUDE 3PHFUSE BUS02,FUSES,100.00,15000.,0.0030,320.00,30000.,1,1 ; 3fuses
C
$INCLUDE 3PHLIN FUSES, BUS05, 0.5348, 1.2042, 7.7E-3, 0.2231, 0.5337, -2.E-3   ;  ,  AR336
5.469
C
C load   MODULE  BUSxx,    Rs,     Xs,    Rp,      Xp,    ?,   @   ; Com.
$INCLUDE 3PHLOAD BUS05,  4.8000, 48.000, 376.00, 660.00,  0,   0   ; 3.0 MVA @ pf=0.875
$INCLUDE 3PHWYEG BUS05,  10000., 0.0000, 0.0000,          0,   0   ; Parallel R for
stability
C
C a SLGF close to bus02 after the fuses
C        module   <bus>, Rflt,  Tflt, Tclr, I, ?  ; 1-phase fault
$INCLUDE 1PHFAULT FUSESA, 0.0, .0167, 9999, 0.,1  ; at FAULTA
C >>>>>>>>
C another branch extends from bus02
$INCLUDE 3PHLIN BUS02, BUS03, 1.0501, 2.3642, 1.5E-2, 0.4380, 1.0479, -3.E-3   ;  ,  AR336
10.737
$INCLUDE 3PHLOAD BUS03,  4.8000, 48.000, 376.00, 660.00,  0,   0   ; 3.0 MVA @ pf=0.875
C
C Feeder Capacitor banks of 3*300 kVAr @bus03
C
C        MODULE  <BUS>, RPHASE, LPHASE, CPHASE,  ?, @                          ; COM
$INCLUDE 3PHWYEG BUS03, 0.001,  0.0010, 12.536,  0, 0                          ; @Bus09
C
$INCLUDE 3PHLIN BUS03, BUS04, 1.5070, 3.3930, 2.3E-2, 0.6286, 1.5039, -5.E-3   ;  ,  AR336
15.409
$INCLUDE 3PHLOAD BUS04,  4.8000, 48.000, 376.00, 660.00,  0,   0   ; 3.0 MVA @ pf=0.875
C C-----------------------------------------------------------------------------
/OUTPUT
C <BUS1><BUS2><BUS3><BUS4><BUS5><BUS6><BUS7><BUS8><BUS9><BUS0><BUS1><BUS2><BUS3>
  BUS02A      BUS02B      BUS02C
  BUS03A      BUS03B      BUS03C
  BUS05A      BUS05B      BUS05C
/PLOT
$INCLUDE ENDRUNTC
```

Simulation Results

- Transient due to a current limiting fuse operation:
  - High fault current at the sending end
  - Fault initiated at a voltage peak

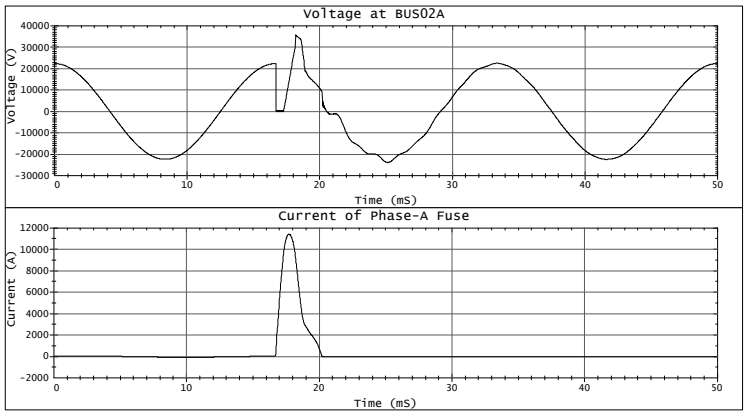

Example Measured Waveform

- Example current limiting fuse operation (monitored during the EPRI Distribution Power Quality Project)

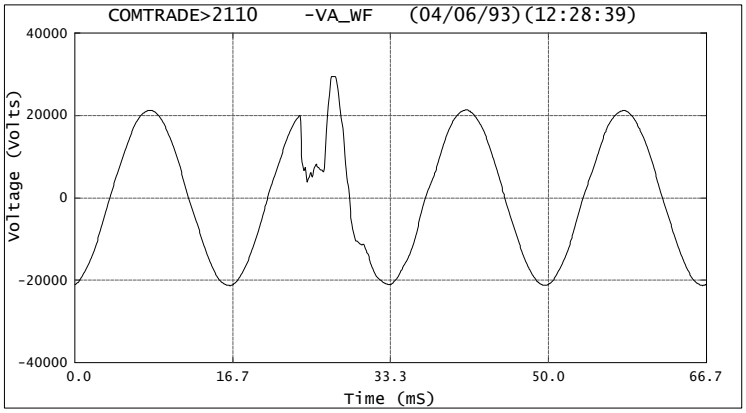

Simulation Results - cont

- Fuse I^2t energy:

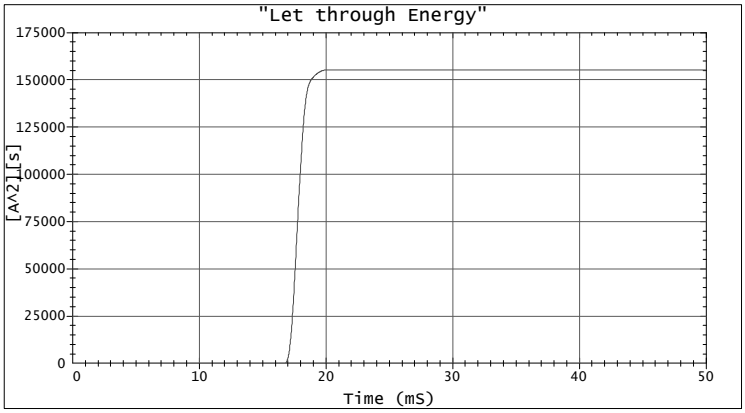

Computer Laboratory

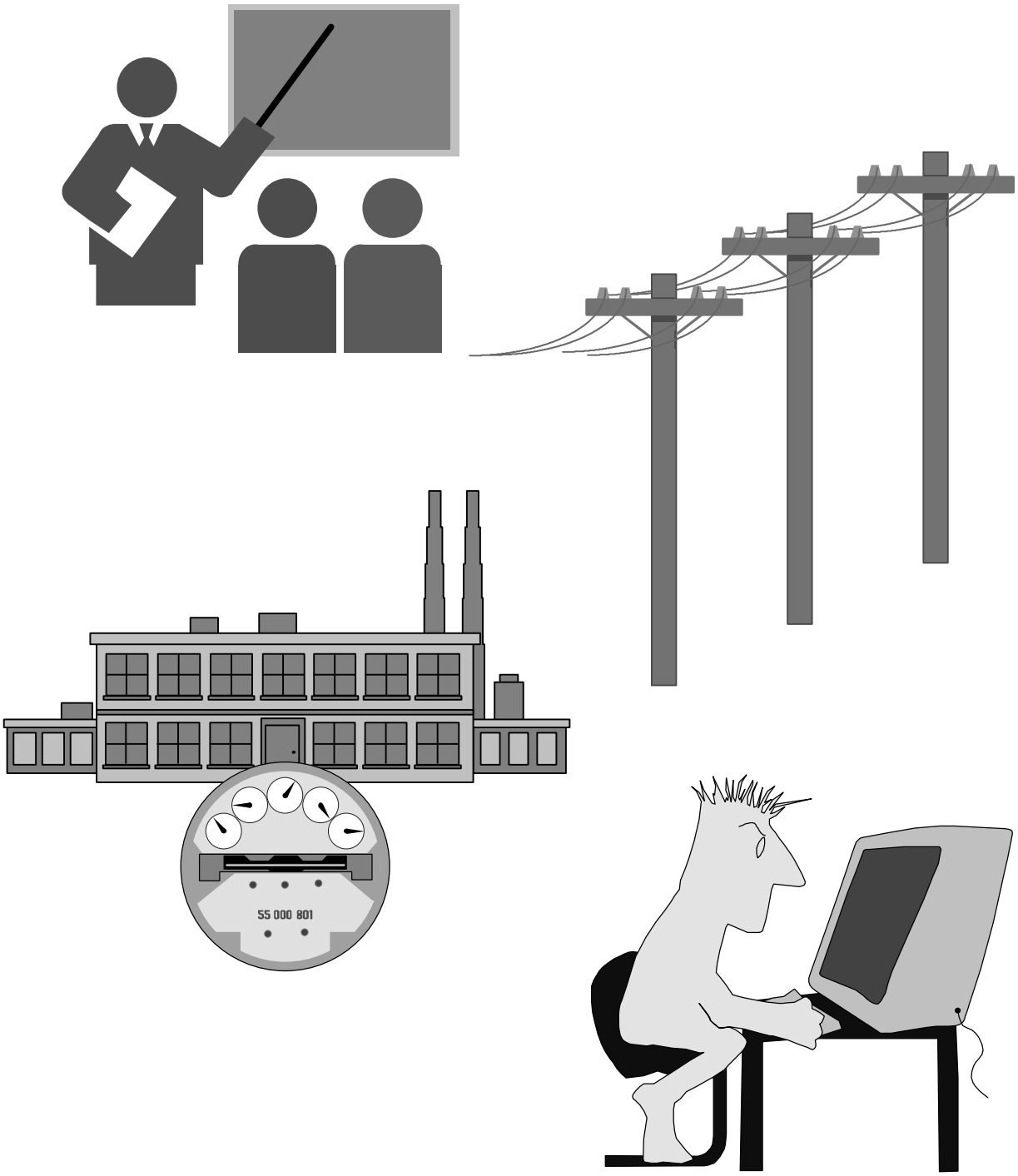

Exercise #1 - Capacitor Energizing

- Case:

  Energize the capacitor bank using “worst-case” switching times
  - peak phase-to-phase voltage on phases A & B
  - peak phase-to-ground voltage on phase C (90° later)

Bus Voltage =	_____	pu
Inrush Current =	_____	amps
Energizing Frequency =	_____	Hz
ASD dc Bus Voltage =	_____	volts

DISTPQ96.DAT

Transmission and Distribution *Volume 3, Slide 195*

```
/SWITCH
C [max phase-to-phase A-B, max phase-to-ground C (worst case)]
C Bus1->Bus2-><---Tclose<----Topen<-------Ie<---Vflash<--Request<-----Target<--O
C  VAC1A CAP1A  80.60E-3   9999.99                                            1
C  VAC1B CAP1B  80.60E-3   9999.99
C  VAC1C CAP1C  84.77E-3   9999.99
C .....^.....^.........^.........^.........^.........^.........^...........^...^
C  VAC2A CAP2A -80.60E-3   9999.99                                            1
C  VAC2B CAP2B -80.60E-3   9999.99
C  VAC2C CAP2C -84.77E-3   9999.99
C .....^.....^.........^.........^.........^.........^.........^...........^...^
```

Exercise #2 - Back-to-Back Switching

- Case:

  Energize capacitor bank #2 using "worst-case" switching times
  - bank #1 already in-service ($t_{close} < 0$)
  - peak phase-to-phase voltage on phases A & B
  - peak phase-to-ground voltage on phase C (90° later)

  Inrush Current = _____ amps
  Energizing Frequency = _____ Hz

  - remove 20µH reactor and run case again...

  Inrush Current = _____ amps
  Energizing Frequency = _____ Hz

Transmission and Distribution *Volume 3, Slide 196*

```
C [Bank #1]
C <---Nodes--><---Refer--><-ohms<---mH<---uF<--------------------------------Out
C <-Bus1<-Bus2<-Bus3<-Bus4<----R<----L<----C                                  V
   CAP1A   CN1              0.10 0.020 54.81
   CAP1B   CN1              0.10 0.020 54.81
   CAP1C   CN1              0.10 0.020 54.81
C .....^.....^.....^.....^.....^.....^.....^.................................^
     CN1                  9999.9
C .....^.....^.....^.....^.....^.....^.....^.................................^
C
C [Bank #2]
C <---Nodes--><---Refer--><-ohms<---mH<---uF<--------------------------------Out
C <-Bus1<-Bus2<-Bus3<-Bus4<----R<----L<----C                                  V
   CAP2A   CN2              0.10 0.020 54.81
   CAP2B   CN2              0.10 0.020 54.81
   CAP2C   CN2              0.10 0.020 54.81
C .....^.....^.....^.....^.....^.....^.....^.................................^
     CN2                  9999.9
C .....^.....^.....^.....^.....^.....^.....^.................................^
```

Exercise #3 - Pre-Insertion Resistor

- Case:

  Energize capacitor bank #1 using "worst-case" switching times
  - bank #2 out of service ($t_{close} > t_{max}$)
  - peak phase-to-phase voltage on phases A & B
  - peak phase-to-ground voltage on phase C (90° later)
  - 6.4Ω pre-insertion resistor (bypass ½ cycle later)

Bus Voltage =	_____	pu
Inrush Current =	_____	amps
Energizing Frequency =	_____	Hz
ASD dc Bus Voltage =	_____	volts


```
/SWITCH
C [max phase-to-phase A-B, max phase-to-ground C (worst case - preinsertion)]
C Bus1->Bus2-><---Tclose<----Topen<-------Ie<---Vflash<--Request<-----Target<--O
C  VAC1A PRE1A  80.60E-3   9999.99                                             1
C  VAC1B PRE1B  80.60E-3   9999.99
C  VAC1C PRE1C  84.77E-3   9999.99
C .....^.....^.........^.........^.........^.........^.........^...........^...^
C [shorting contact]
C Bus1->Bus2-><---Tclose<----Topen<-------Ie<---Vflash<--Request<-----Target<--O
C  VAC1A CAP1A  88.93E-3   9999.99                                             1
C  VAC1B CAP1B  88.93E-3   9999.99
C  VAC1C CAP1C  93.10E-3   9999.99
C .....^.....^.........^.........^.........^.........^.........^...........^...^
/BRANCH
C [VCR - pre-insertion resistor - 6.4ohms]
C <---Nodes--><---Refer--><-ohms<---mH<---uF<--------------------------------Out
C <-Bus1<-Bus2<-Bus3<-Bus4<----R<----L<----C                                   V
C  PRE1A CAP1A               6.4
C  PRE1B CAP1B               6.4
C  PRE1C CAP1C               6.4
C .....^.....^.....^.....^.....^.....^.....^.....................................^
```

Exercise #4 - Synchronous Closing

- Case:

  Energize capacitor bank #1 using "near-synchronous" switching times
  - bank #2 out of service ($t_{close} > t_{max}$)
  - min phase-to-phase voltage on phases A & B
  - min phase-to-ground voltage on phase C (90° later)

Bus Voltage =	_____	pu
Inrush Current =	_____	amps
Energizing Frequency =	_____	Hz
ASD dc Bus Voltage =	_____	volts

Transmission and Distribution *Volume 3, Slide 198*

```
C <-------- 13.2kV Vacuum Switch
C           with Synchronous Closing Control
C
/SWITCH
C [min phase-to-phase A-B, min phase-to-ground C (near synchronous closing)]
C Bus1->Bus2-><---Tclose<----Topen<-------Ie<---Vflash<--Request<-----Target<--O
C  VAC1A CAP1A  84.80E-3   9999.99                                            1
C  VAC1B CAP1B  84.80E-3   9999.99
C  VAC1C CAP1C  88.96E-3   9999.99
C .....^.....^.........^.........^.........^.........^.........^.........^...^
```

Exercise #5 - Capacitor Switch Restrike

- Case:

  de-energize capacitor bank #1 with a phase C restrike
  - bank #2 out of service ($t_{close} > t_{max}$)
  - open phases B & C (phase A sticks)
  - close phase C ½ cycle later

  Bus Voltage = _____ pu

  ASD dc Bus Voltage = _____ volts


```
C <-------- 13.2kV Vacuum Switch Restrike
C
C
/SWITCH
C [vacuum switch - closed in steady state - open @ 80mSec]
C Bus1->Bus2-><---Tclose<----Topen<-------Ie<---Vflash<--Request<-----Target<--O
C  VAC1A CAP1A -84.80E-3   9999.99                                            1
C  VAC1B CAP1B -84.80E-3  80.0E-03
C  VAC1C CAP1C -88.96E-3  80.0E-03
C .....^.....^.........^.........^.........^.........^.........^.........^...^
C  CAP1C VAC1C  88.96E-3   9999.99
C .....^.....^.........^.........^.........^.........^.........^.........^...^
```

Exercise #6 - Restrike, Impact of MOV

- Case:

  de-energize capacitor bank #1 with a phase C restrike
  - 10kV MOV in-service
  - bank #2 out of service ($t_{close} > t_{max}$)
  - open phases B & C (phase A sticks)
  - close phase C ½ cycle later

Bus Voltage =	_____	pu
Arrester Current =	_____	amps
Arrester Energy =	_____	kJ
ASD dc Bus Voltage =	_____	volts

Transmission and Distribution *Volume 3, Slide 200*

```
/BRANCH
C [connectivity - measuring current]
C <---Nodes--><---Refer--><-ohms<---mH<---uF<--------------------------------Out
C <-Bus1<-Bus2<-Bus3<-Bus4<----R<----L<----C                                  V
   13_2A  MOVA            0.001                                              1
   13_2B  MOVB            0.001                                              1
   13_2C  MOVC            0.001                                              1
C .....^.....^.....^.....^.....^.....^.....^.................................^
C
C [single-exponential no gap]
C <-BUS1<-BUS2<-BUS3<-BUS4<-----------5555.<----------------------------------0
92  MOVA                              5555.                                   4
C .....^.....^.....^.....^............^^^^.................................^
C -----------------VREF<------------------VFLASH<------------------VZERO
                 20900.                    -100.
C ....................^........................^......................^
C -----------------COEF<-------------------EXPON<-------------------VMIN
                   500.                      30.                       .5
C ....................^........................^......................^
                   9999
```

Exercise #7 - Magnification

- Case:

  Energize capacitor bank #1 with "worst-case" closing times
  - bank #2 out of service ($t_{close} > t_{max}$)
  - peak phase-to-phase voltage on phases A & B
  - peak phase-to-ground voltage on phase C (90° later)

  13.2kV Bus Voltage = _____ pu

  480 V Bus Voltage = _____ pu

  ASD dc Bus Voltage = _____ volts

Transmission and Distribution *Volume 3, Slide 201*

```
C <-------- 300kVAr Power Factor Correction
C           500kW Resistive Load
C
/BRANCH
C <---Nodes--><---Refer--><-ohms<---mH<---uF<--------------------------------Out
C <-Bus1<-Bus2<-Bus3<-Bus4<----R<----L<----C                                  V
   4801A 4801B                        1151.3
   4801B 4801C                        1151.3
   4801C 4801A                        1151.3
C .....^.....^.....^.....^.....^.....^.....^.................................^
C
C <-------- 500kW Resistive Load
C
C <---Nodes--><---Refer--><-ohms<---mH<---uF<--------------------------------Out
C <-Bus1<-Bus2<-Bus3<-Bus4<----R<----L<----C                                  V
   4801A 4801B             1.382                                              2
   4801B 4801C             1.382                                              2
   4801C 4801A             1.382                                              2
C .....^.....^.....^.....^.....^.....^.....^.................................^
```

Exercise #8 - Low Voltage Filter Solution

- Case:

  Energize capacitor bank #1 with "worst-case" closing times
  - bank #2 out of service ($t_{close} > t_{max}$)
  - peak phase-to-phase voltage on phases A & B
  - peak phase-to-ground voltage on phase C (90° later)

  13.2kV Bus Voltage = _____ pu

  480 V Bus Voltage = _____ pu

  ASD dc Bus Voltage = _____ volts


```
C <-------- 300kVAr Power Factor Correction - Configured as a 4.7th Filter
C
C
/BRANCH
C <---Nodes--><---Refer--><-ohms<---mH<---uF<--------------------------------Out
C <-Bus1<-Bus2<-Bus3<-Bus4<----R<----L<----C                                  V
C  4801A FCAPA                  0.092                                        1
C  4801B FCAPB                  0.092
C  4801C FCAPC                  0.092
C .....^.....^.....^.....^.....^.....^.....^.................................^
C  FCAPA FCAPB                       1151.3                                  2
C  FCAPB FCAPC                       1151.3
C  FCAPC FCAPA                       1151.3
C .....^.....^.....^.....^.....^.....^.....^.................................^
```

Exercise #9 - Low Voltage MOV Solution

- Case:

  Energize capacitor bank #1 with "worst-case" closing times
  - 480 volt MOV arrester in-service
  - bank #2 out of service ($t_{close} > t_{max}$)
  - peak phase-to-phase voltage on phases A & B
  - peak phase-to-ground voltage on phase C (90° later)

13.2kV Bus Voltage =	_____	pu
480 V Bus Voltage =	_____	pu
Arrester Current =	_____	amps
Arrester Energy =	_____	kJ
ASD dc Bus Voltage =	_____	volts

Transmission and Distribution *Volume 3, Slide 203*

```
C [connectivity - measuring current]
C <---Nodes--><---Refer--><-ohms<---mH<---uF<-------------------------------Out
C <-Bus1<-Bus2<-Bus3<-Bus4<----R<----L<----C                                 V
   4801A LMOVA            0.001                                             1
   4801B LMOVB            0.001                                             1
   4801C LMOVC            0.001                                             1
C .....^.....^.....^.....^.....^.....^.....^.................................^
C
C [single-exponential no gap]
C <-BUS1<-BUS2<-BUS3<-BUS4<-----------5555.<----------------------------------0
92 LMOVA                              5555.                                  4
C .....^.....^.....^.....^...........^^^^...................................^
C
C -----------------VREF<------------------VFLASH<------------------VZERO
                   700.                    -100.
C ....................^........................^......................^
C -----------------COEF<-------------------EXPON<-------------------VMIN
                   500.                      30.                       .5
C ....................^........................^......................^
                   9999
```

Exercise #10 - Ferroresonance

- Case:

  Open the cable and transformer (circuit #2)

  - open phases A & C (phase B remains closed)
  - capacitor banks #1 & #2 out of service ($t_{close} > t_{max}$)

  Max Transformer Voltage = _____ pu

Transmission and Distribution *Volume 3, Slide 204*

```
C <-------- Circuit #2  13.2kV Cable - from substation to node 200
C
/SWITCH
C [circuit #2 breaker (normally closed]
C Bus1->Bus2-><---Tclose<----Topen<-------Ie<---Vflash<--Request<-----Target<--O
C  13_2A CKT2A -10.00E-3  25.0E-03
C  13_2B CKT2B -10.00E-3   9999.99
C  13_2C CKT2C -10.00E-3  25.0E-03
C .....^.....^.........^.........^.........^.........^.........^.........^...^
   13_2A CKT2A -10.00E-3   9999.99
   13_2B CKT2B -10.00E-3   9999.99
   13_2C CKT2C -10.00E-3   9999.99
C .....^.....^.........^.........^.........^.........^.........^.........^...^
```

Exercise #11 - Motor Starting

- Case:

  Start the 1200 HP, 4160 volt induction motor at customer #3
  - close phases A, B, & C at the same time
  - reset Δt and Tmax for motor starting case
  - capacitor banks #1 & #2 out of service ($t_{close} > t_{max}$)

Starting current = _____ amps

4160 volt bus sag = _____ %


```
C        <---percent<----Hertz
C <-BusA <-Init-Slip<-Sys-Freq
40MOTORA       100.0      60.0
C .....^xx.........^.........^(initial slip: 100 standstill, 0 for synch speed)
C <-BusB
40MOTORB
C <-BusC
40MOTORC
C .....^
.
.
C [motor ratings - full load]
C <-----HP<----Volts<--perunit<--perunit<--perunit
C <-PowerR<-VoltageR<-PowFactR<-----EffR<----SlipR
   -1200.0    4160.0     0.900     0.935     0.010
C .......^.........^.........^.........^.........^
C
.
.
.
```

References:

[1] J.M. Schneider et al, "The Rockport Transient Voltage Monitoring Systems," CIGRE Report 23-04, 1988 Session.

[2] CIGRE WG. 33.02, "Guide to Procedures for Estimating The Lightning Performance of Transmission Lines, CIGRE Technical Brochure 63,1991.

[3] H.V. Nguyen, H.W. Dommel, J.R. Marti, "Direct Phase-Domain Modelling of Frequency-Dependent Overhead Transmission Lines," Paper 96 SM 458-0 PWRD, Summer Power Meeting, Denver, Colorado, July 1996.

[4] H.V. Nguyen, H.W. Dommel, J.R. Marti, "Modelling of Single-Phase Nonuniform Transmission Lines in Electromagnetic Transient Simulations," Paper 96 SM 459-8 PWRD, Summer Power Meeting, Denver, Colorado, July 1996.

Power System Analysis Using the Electromagnetic Transients Program

EMTP

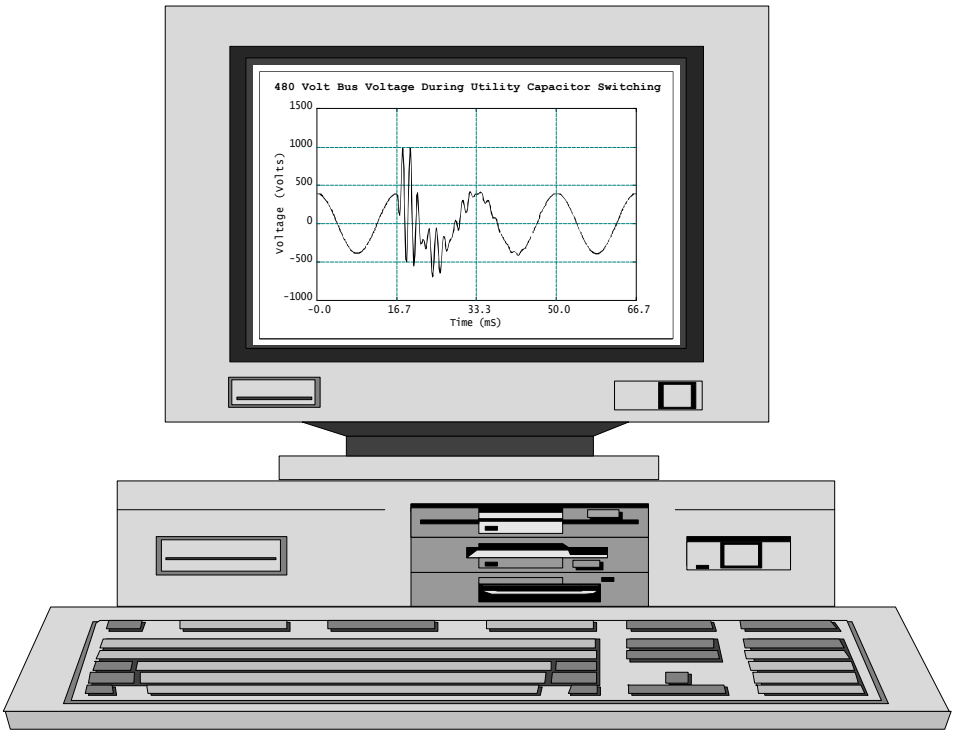

EMTP Case Study Workbook

Volume 4 - Power Quality and Power Electronics

April 2000

Table of Contents:

Introduction to P.E. Modeling Using EMTP	3
TACS for Power Electronics	10
dc Drive / Harmonic Filter Design Case Study	26
Three-Phase, Six-Pulse Diode Bridge Model	37
PWM ASD Model and Case Studies	45
❑ Model Development	49
❑ Harmonic Current Reduction Case Study	61
❑ Transformer Derating Case Study	66
❑ IEEE 519 Compliance Case Study	73
❑ Nuisance Tripping Case Study	77
EMTP Lab Exercise (PQ Using PCs Class)	84

List of Related EMTP Data Files:

dc Drive / Harmonic Filter Design	DISTORT.DAT
Harmonic Filter Design - Frequency Scan	HARMONIC.DAT
Three-Phase, Six-Pulse Diode Bridge	3PDIODE.DAT
PWM ASD Running @ 45Hz	PWMASD45.DAT
PWM ASD / Nuisance Tripping	NUISANCE.DAT
PWM ASD / Nuisance Tripping	ASDTRIP.DAT
PWM ASD / UM Induction Motor - Type 4	PWMMOTOR.DAT
PQ Using PCs Lab Example	EMTPLAB.DAT

Introduction to PE Modeling using EMTP

- Basics about Power Electronics (PE)
- Available switching devices
  - Diode
  - SCR
  - GTO
  - IGBT
  - MCT
- Characteristics of PE device
  - Turn-on control
  - Turn-off control
  - Forward drop, On-status loss

Power Quality and Power Electronics *Volume 4, Slide 3*

Introduction - cont

- PE Applications in Transmission Level

HVDC: ac/dc conversion

FACTS:

- Shunt static var compensation (SVC)
- Series capacitor compensation
- Static condensor (STATCON)
- Uniform power flow controller (UPFC)
- Static switch
- Static phase-shifting
- SMES

Introduction - cont

- PE Applications in Subtransmission and Distribution Levels
  - SVC
  - Static switching load transfer
  - Fault current limiting switching
  - Active filters
- PE Applications at Customer Levels
  - ASD
  - Power supply
  - UPS, SSD
  - Customer Power devices:
    - DVR
    - UPFC

Power Quality and Power Electronics *Volume 4, Slide 5*

Introduction - cont

- Fundamental Components of a PE System

  - Switching Devices and Application Topologies

  - Tracking and Sampling

  - Operation Control System

  - Firing Circuit

Power Quality and Power Electronics *Volume 4, Slide 6*

Introduction - cont

- What needs to be studied ?
  - Performance Characteristics
    - Harmonic generation
    - Dynamic response
    - Transient response
    - System interaction
- Why simulate ?
  - Complicated system
  - Non-linearity
  - Existing problems
  - New devices and new applications

Power Quality and Power Electronics *Volume 4, Slide 7*

Introduction - cont

- Simulation technologies
  - TNA
  - Numerical
  - Hybrid
- Types of simulation
  - Frequency domain
  - Time domain
  - Real time

Introduction - cont

- Common Tools for Numerical Simulation
  - Saber
  - Spice
  - EMTP
  - NETOMAC (Siemens)

- Why EMTP ?
  - Application oriented
  - Suitable for doing steady-state, dynamic and transient study
  - Easy interface between PE system, utility or industrial circuit and related mechanical system. (TACS features)

    ***Not** for detailed device or PE system level study*

Power Quality and Power Electronics *Volume 4, Slide 9*

TACS for Power Electronics

- Power Electronics Switching Devices and Snubber Requirement
  - Diode
  - Thyristor (SCR)
  - GTO (Gate-turn-off thyristor)
- Switching Device Firing Signal Generation
  - Square pulse
  - PWM scheme
- System Interface
  - Control logical
  - Synchronization

Power Quality and Power Electronics *Volume 4, Slide 10*

Power Electronic Switching Devices

- Diode: type-11 switch without any control

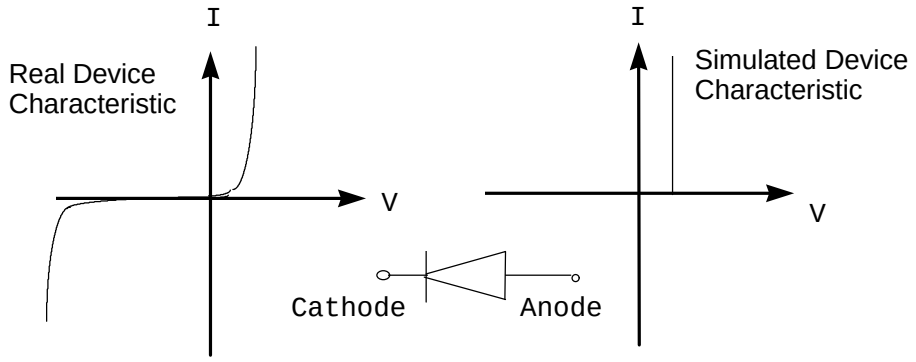

The diode starts conducting when the forward voltage becomes greater than the minimum ignition voltage and ceases conducting when the forward current becomes smaller than the minimum holding current.

Power Electronic Switching Devices - cont

- Thyristor(SCR): type-11 switch with the grid control

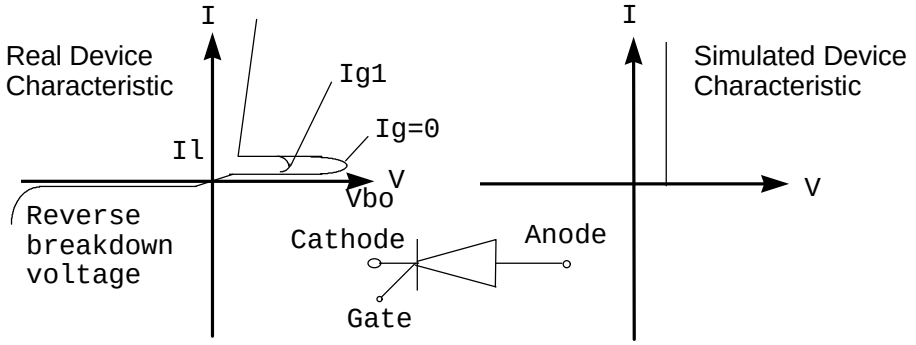

Working with rules of diode except that the conducting will not take place until the grid signal becomes greater than zero.

Power Electronic Switching Devices - cont

- GTO: Device is idealized without implementation of detailed turn-on/turn of characteristics. Different modeling representation can be used

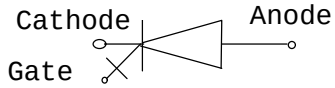

(1)

Type-13 TACS controlled switch only

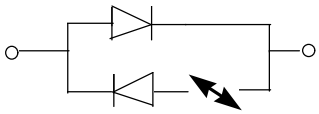

(2)

Type-13 Combined with uncontrolled type-11 switches

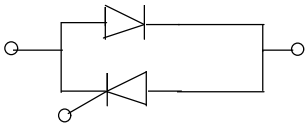

(3)

Controlled Type-11 combined with uncontrolled Type-11

Power Electronic Switching Devices - cont

- GTO Model (1):
  - Use type-13, TACS controlled switch with open/close control,
  - Bi-directional current flows are allowed,
  - Allow to stay on for entire period,
  - No need for added diode,
  - Use least number of switch component, and
  - With dual sources, the dc link initial condition is incorrect.

Power Electronic Switching Devices - cont

- GTO Model (2):
  - Use type-13, TACS controlled switch with open/close control,
  - Series diode connection prevents bi-direction current flowing,
  - Must have anti-parallel diodes to form an inductive current loop,
  - Requires turn-off snubbers for diode,
  - Use most switching elements, and
  - No initial condition problem.

Power Electronic Switching Devices - cont

- GTO Model (3):
  - Use type-11, TACS controlled switch with open/close control,
  - Short grid signal to turn on,
  - Open/close set to 0 while switch on ,
  - Open/close set to negative to turn off GTO at end of cycle,
  - Must add anti-parallel diodes for inductive current loop,
  - Requires turn-off snubbers for diode,
  - No initial condition problem.

Switching Errors Due to Time Step Size

- Turn on errors: SCR turn-on errors can introduce fake harmonics, but do not cause numerical problems.

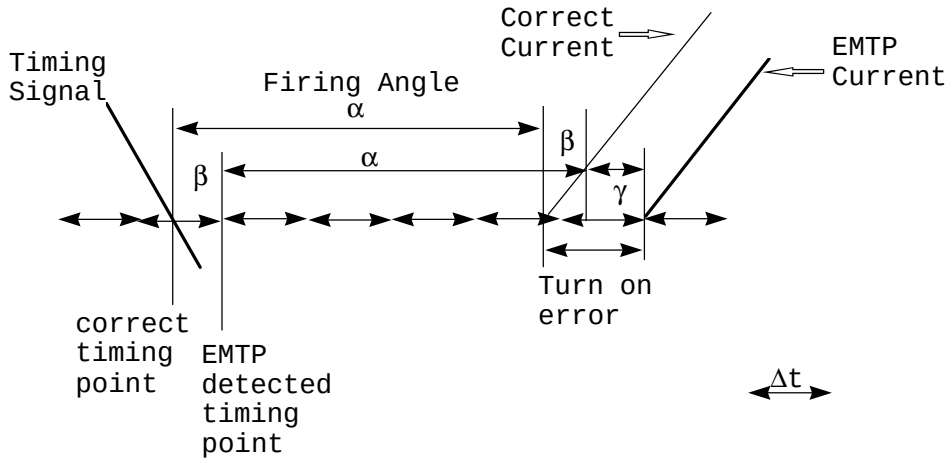

Switching Errors Due to Time Step Size

- EMTP turn-off error.

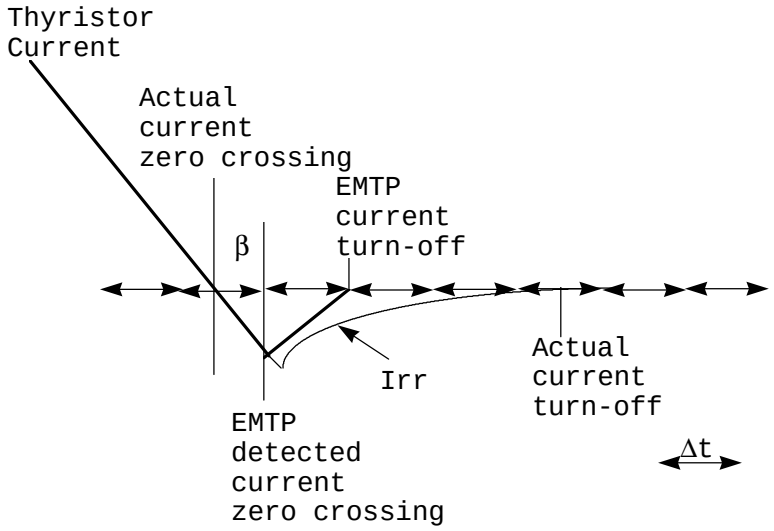

Numerical Oscillations

- The turn-off error can cause a numerical oscillation problem when a high di/dt inductance current is switched.

Theoretically,

$$V(t) = L\frac{di}{dt}$$

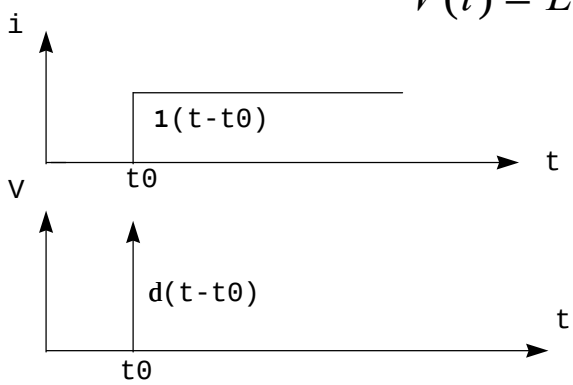

A step current change at the t0.

A delta function at the t0, and zero elsewhere.

Numerical Oscillations - cont

In EMTP:

$$V(t) = -V(t-\Delta t) + \frac{2L}{\Delta t} i(t) - \frac{2L}{\Delta t} i(t-\Delta t)$$

If i(t-Δt)=0, i(t)=1.0, assuming V(t-Δt)=0, then, at time=t:

$$V(t) = \frac{2L}{\Delta t} \quad ,$$

At time=t+Δt,

$$V(t+\Delta t) = -V(t) + \frac{2L}{\Delta t} i(t+\Delta t) - \frac{2L}{\Delta t} i(t)$$
$$= -V(t)$$

Numerical Oscillations - cont

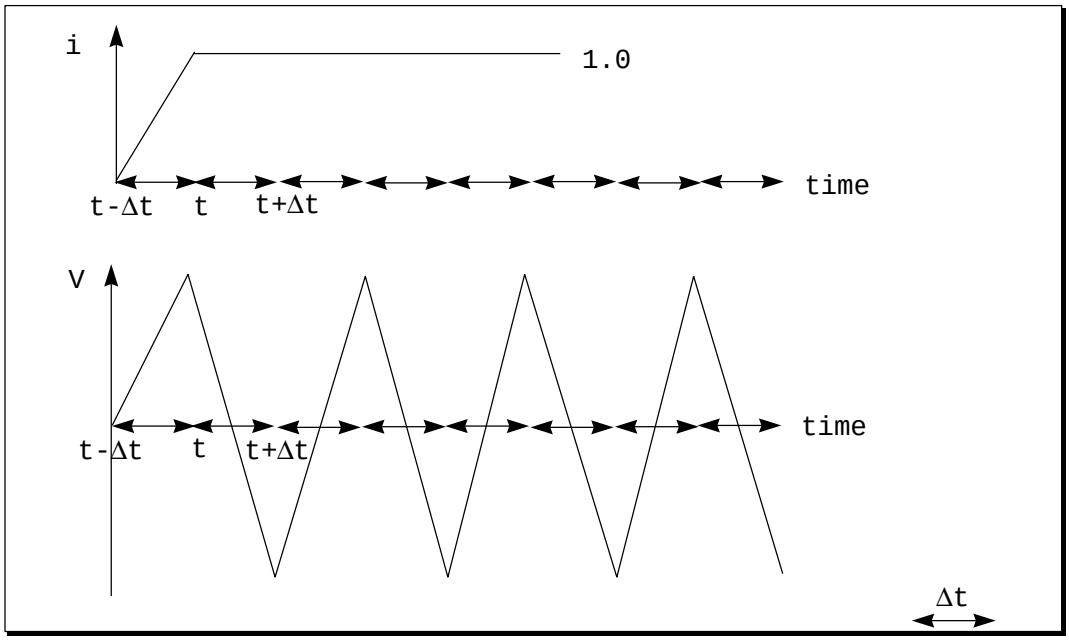

Numerical Oscillations - cont

- For slow changing current, the problem will not occur.

If the current takes two Dt to reach the peak, then,

$$V(t) = -V(t-\Delta t) + \frac{2L}{\Delta t} i(t) - \frac{2L}{\Delta t} i(t-\Delta t)$$

$$= \frac{2L}{\Delta t} \times \frac{1}{2} = \frac{L}{\Delta t} \text{ ,}$$

At time=t+Δt,

$$V(t+\Delta t) = -V(t) + \frac{2L}{\Delta t} i(t+\Delta t) - \frac{2L}{\Delta t} i(t)$$

$$= -V(t) + \frac{2L}{\Delta t} \times 1 - \frac{2L}{\Delta t} \times \frac{1}{2} = 0$$

Numerical Oscillations - cont

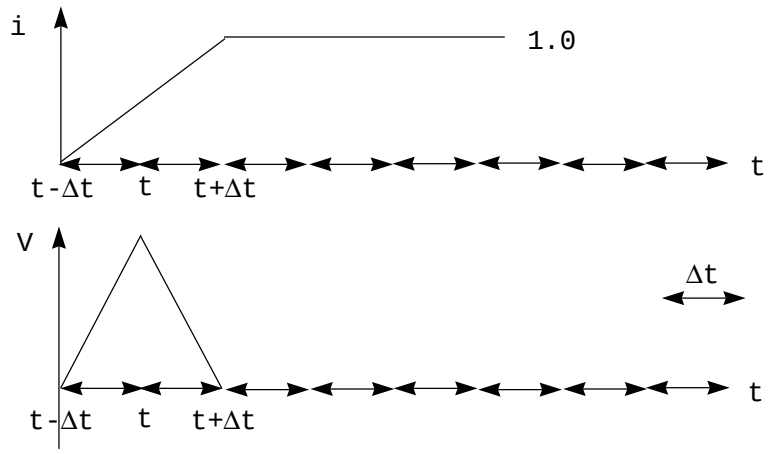

Snubber Requirement

- Practical power electronic circuits need the turn-off snubbers to protect the device from high high dv/dt because of Irr.
- EMTP simulated power electronic circuits need the turn-off snubbers to prevent the numerical isolation problems even though Irr is not actually characterized in the device model.
- Snubber parameters designed for pratical P.E. applications may or may not work for EMTP simulation
- In the EMTP study, the artificial snubbers should be carefully selected so the errors introduced by the snubbers are controlled to an acceptable level.

Solutions to Numerical Oscillations

1. Include a stray capacitor between the switch contacts.

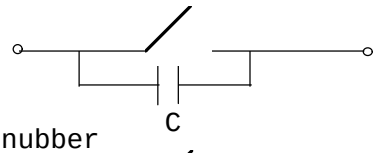

2. Using a snubber

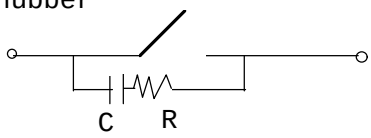

The minimum RC time constant should be greater than $3\Delta T$

3. Using a damping resistor across the switched inductor

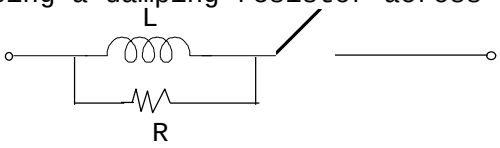

$R=L/(\beta\Delta t)$

β=0.15 - 0.3 is recommended for P.E. applications

System Model - Filter Design

Equivalent Source:

Z = 0.05 + j 2.00 % @ 10 MVA = 0.0595 + j 2.3805 Ω

Capacitor Banks:

34.5 kV, 9.0 MVAr	20.06 μF
480 V, 450 kVAr	5180.7 μF

Distribution Circuit:

Z = 1.50 + j 3.00 % @ 10 MVA = 1.7854 + j 3.5708 Ω

$$X_C = \frac{kV^2}{MVAr} \qquad C = \frac{1}{2\pi * f * X_C}$$

$$C = \frac{MVAr}{2\pi * f * kV^2} \approx \frac{159 * kVAr}{f * V^2} F$$

System Model - cont

Step-down Transformer:

Z = 3.70% @ 2000 kVA, X/R = 30

High Side: base Z = 595 Ω Z = 0.367 + j 11.01 Ω
Low Side: base Z = 0.1152 Ω Z = 0.00691 + j 0.21312 Ω

Load:

1500 kVA, 480 V, 95% pf 0.1459 + j 0.0479 Ω

Arrester:

480 V, (connected 277 V), 700 V @ 500 A (36x90)

Step-down Transformer

```
C Step Down Transformer
C 34.5kV/480V , Ztx = 3.70 % @ 2000 KVA, X/R = 30
C
C TRANSFORMER <--Ref<----><--Iss<--Phi<-Name<-Rmag<----------------------------O
  TRANSFORMER                            XFMR1
C ...........^.....^xxxxxx.....^.....^.....^.....^xxxxxxxxxxxxxxxxxxxxxxxxxxxxx^
            9999
C
C <---Nodes--><----------><-Ohms<---mH<---kV
C <-Bus1<-Bus2<----------><---Rk<---Lk<-Volt---------------------------------->O
01  TXHS                  0.3671 29.19 19.92
C .....^.....^xxxxxxxxxxxx.....^.....^.....^xxxxxxxxxxxxxxxxxxxxxxxxxxxxxxxxxxx^
02  480A                  0.00010.0057 0.277
C .....^.....^xxxxxxxxxxxx.....^.....^.....^xxxxxxxxxxxxxxxxxxxxxxxxxxxxxxxxxxx^
```

$$L_{HS} = \left(\frac{3.7\%}{2}\right) * \left(\frac{\left(\frac{34.5}{\sqrt{3}}\right)^2}{\frac{2}{3}}\right) * \frac{1}{2\pi 60} = 29.19\,\text{mH}$$

Frequency Response Characteristic

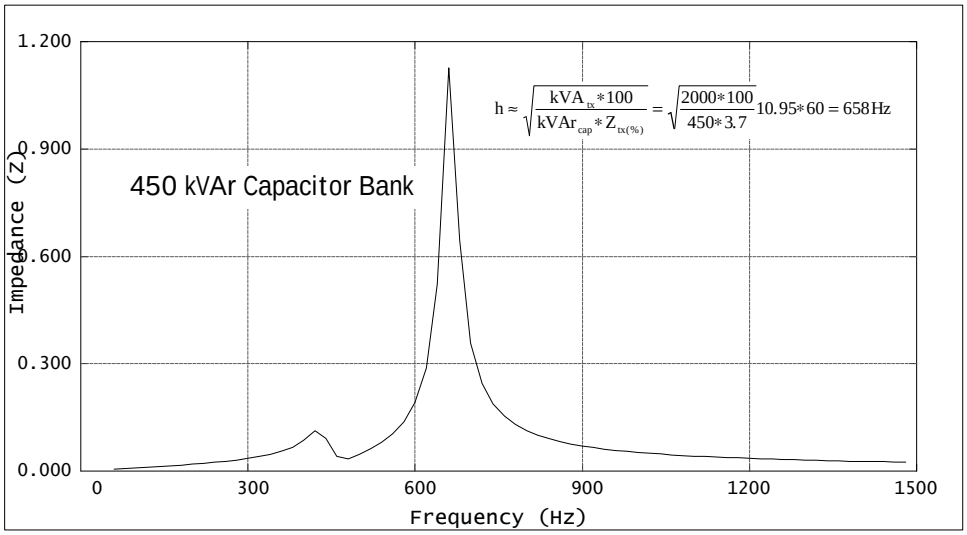

HARMONIC.DAT

Power Quality and Power Electronics *Volume 4, Slide 30*

EMTP - dc Drive Representation

```
C  Harmonic Current Source for 200 HP DC Drive
C  IFL = 240 Amps  I5 = 33.6%, I7 = 1.6%,  I11 = 8.7%,  I13 = 1.2%
C
C <--Bus<I<-----Ampl<-----Freq<----Phase<-------A1<------T1><---Tstart<----Tstop
14 200HP-1     339.4      60.0     -75.0                      50.0E-06      9999
C .....^.^.........^.........^.........^.........^........^..........^.........^
14 200HP-1     114.0     300.0     156.0                      50.0E-06      9999
C .....^.^.........^.........^.........^.........^........^..........^.........^
14 200HP-1       5.4     420.0      29.0                      50.0E-06      9999
C .....^.^.........^.........^.........^.........^........^..........^.........^
14 200HP-1      29.5     660.0      49.0                      50.0E-06      9999
C .....^.^.........^.........^.........^.........^........^..........^.........^
14 200HP-1       4.1     780.0      54.0                      50.0E-06      9999
C .....^.^.........^.........^.........^.........^........^..........^.........^
14 200HP-1      15.3    1020.0     -57.0                      50.0E-06      9999
C .....^.^.........^.........^.........^.........^........^..........^.........^
14 200HP-1       4.4    1140.0     -46.0                      50.0E-06      9999
C .....^.^.........^.........^.........^.........^........^..........^.........^
14 200HP-1       9.5    1380.0    -163.0                      50.0E-06      9999
C .....^.^.........^.........^.........^.........^........^..........^.........^
14 200HP-1       4.1    1500.0    -149.0                      50.0E-06      9999
C .....^.^.........^.........^.........^.........^........^..........^.........^
```

DISTORT.DAT

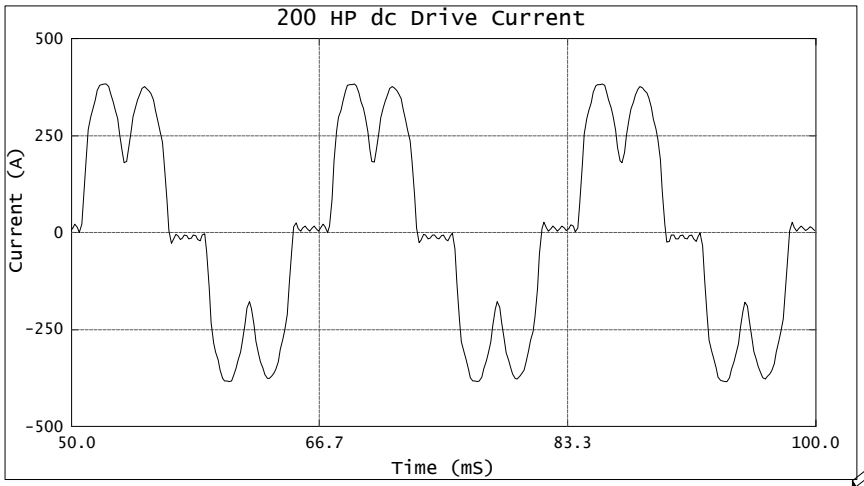

Voltage Distortion Level

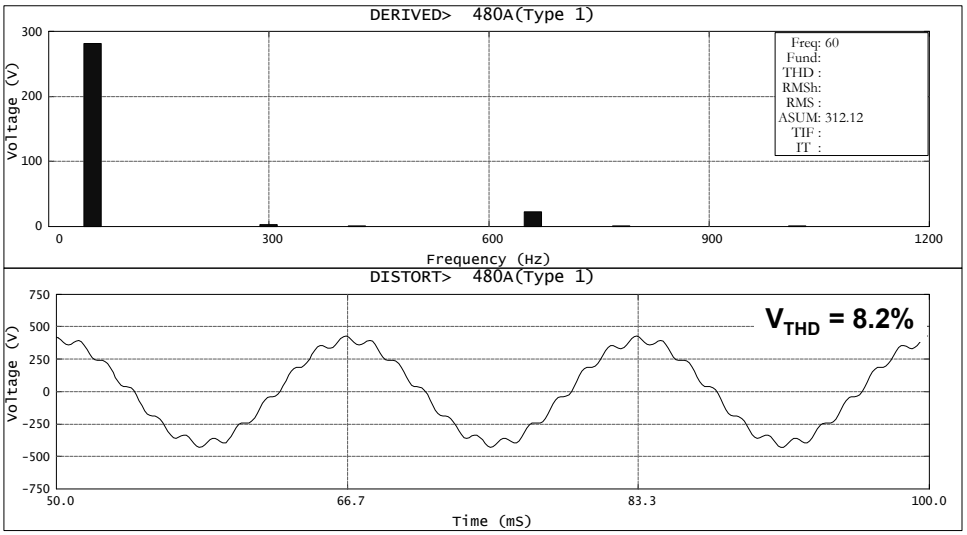

$$V_{THD} = \sqrt{\frac{\sum V_h^2}{V_1^2}}$$

Reduction Methods - Basic Filter Design

The general method for applying filters is as follows:

- Apply one single tuned filter first, and design it for the lowest generated frequency **(i.e. 5th harmonic - 4.7th filter)**.
- Determine the voltage distortion at the low voltage bus, **5%** is the commonly applied limit.
- Vary filter elements (tolerances) and check its effectiveness.
- Check the frequency response characteristic to verify that the newly created parallel resonance is not close to a harmonic frequency.
- If necessary, investigate the need for several filters, such as 5th and 7th.

Effect of Filter on Frequency Response

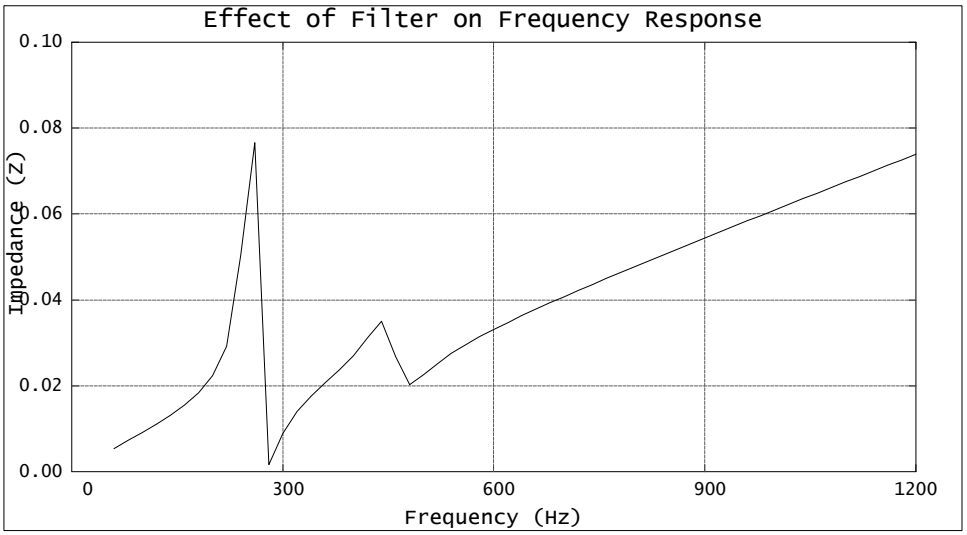

Power Quality and Power Electronics *Volume 4, Slide 34*

Typical Filter Configuration:

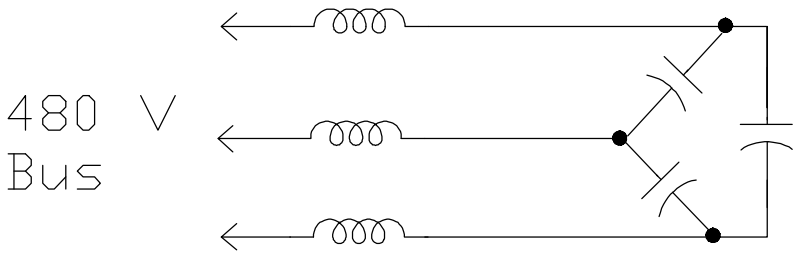

Filter Design Spreadsheet

SYSTEM INFORMATION:

Filter Specification:	5 th	Power System Frequency:	60 Hz
Capacitor Bank Rating:	450 kVAr	Capacitor Rating:	480 Volts
Rated Bank Current:	541 Amps		60 Hz
Nominal Bus Voltage:	480 Volts	Derated Capacitor:	450 kVAr
Capacitor Current (actual):	541.3 Amps	Total Harmonic Load:	200 kVA
Filter Tuning Harmonic:	4.7 th	Filter Tuning Frequency:	282 Hz
Cap Impedance (wye equivalent):	0.5120 W	Cap Value (wye equivalent):	5180.8 uF
Reactor Impedance:	0.0232 W	Reactor Rating:	0.0615 mH
Filter Full Load Current:	566.9 Amps	Supplied Compensation:	471 kVAr
Transformer Nameplate:	2000 kVA	Utility Side Vh:	1.00 % THD
(Rating and Impedance)	3.70 %	*(Utility Harmonic Voltage Source)*	
Load Harmonic Current:	35.00 % Fund	Load Harmonic Current:	84.2 Amps
Utility Harmonic Current:	79.7 Amps	Max Total Harm. Current:	163.9 Amps

CAPACITOR DUTY CALCULATIONS:

Filter RMS Current:	590.2 Amps	Fundamental Cap Voltage:	502.8 Volts
Harmonic Cap Voltage:	29.1 Volts	Maximum Peak Voltage:	531.8 Volts
RMS Capacitor Voltage:	503.6 Volts	Maximum Peak Current:	730.9 Amps

Important Parameters:

- Capacitor Size and Voltage
- Tuning Frequency
- Reactor Impedance
- Capacitor Limits
- Reactor Current Rating (60 Hz and Harmonic)

CAPACITOR LIMITS: (IEEE Std 18-1980)

	Limit		Actual
Peak Voltage:	120%	⟷	111%
Current:	180%	⟷	109%
KVAr:	135%	⟷	114%
RMS Voltage:	110%	⟷	105%

Power Quality and Power Electronics *Volume 4, Slide 35*

Misc. Filter Calculations:

$$kVAr_{actual} = kVAr_{rated} * \left(\frac{kV_{actual}}{kV_{rated}}\right)^2$$

$$X_R = \frac{X_C}{n^2}$$

$$I_{FL} = \left(\frac{kVAr_{actual}}{\sqrt{3} * kV_{actual}}\right)$$

$$I_{F_{FL}} = \left(\frac{V_{Bus}}{\sqrt{3} * \left(X_C + X_R\right)}\right)$$

$$X_C = \frac{kV^2{}_{rated}}{MVAr_{rated}}$$

$$kVAr_{supplied} = \sqrt{3} * V_{Bus} * I_{F_{FL}}$$

Voltage Distortion Level with Filter

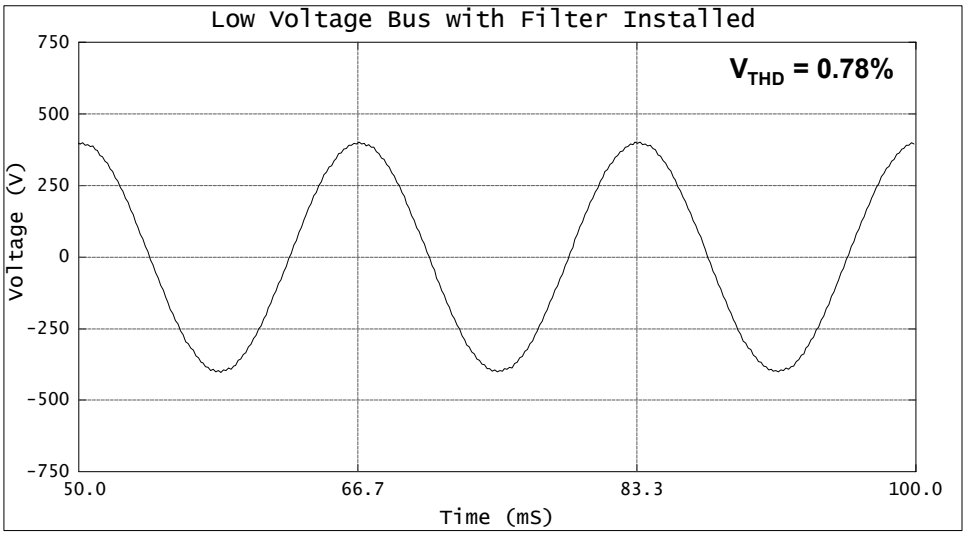

Three-Phase Diode Bridge Model

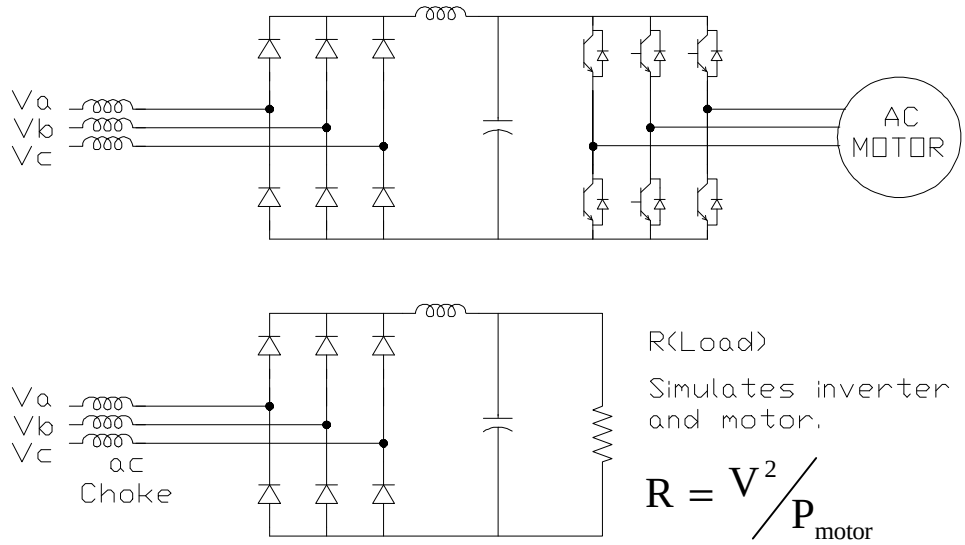

dc Bus Components

```
/BRANCH
C
C <-------- dc Bus Components
C
C <---Nodes--><---Refer--><-ohms<---mH<---uF<--------------------------------Out
C <-Bus1<-Bus2<-Bus3<-Bus4<----R<----L<----C                                  V
  STARTRDCPLUS             0.001  0.01                                       1
C .....^.....^.....^.....^.....^.....^.....^.................................^
  DCMNUSDCPLUS              20.0
C .....^.....^.....^.....^.....^.....^.....^.................................^
  DCPLUSDCMNUS                        1000.0                                 2
C .....^.....^.....^.....^.....^.....^.....^.................................^
  RECPOS                                 1.0
C .....^.....^.....^.....^.....^.....^.....^.................................^
  RECNEG                                 1.0
C .....^.....^.....^.....^.....^.....^.....^.................................^
  RECNEGDCMNUS             0.001  0.01
C .....^.....^.....^.....^.....^.....^.....^.................................^
```

Approx 20 HP

Power Quality and Power Electronics *Volume 4, Slide 38*

$$V_{d_{(\text{resistive})}} = \frac{3\sqrt{2}}{\pi} V_{LL} \approx 1.35 * 480 = 648 \text{ V}$$

$$P = 20\text{HP} \approx 20\text{kVA}$$

$$R \approx \frac{V_{dc}^{\ 2}}{VA} = \frac{648^2}{20{,}000} = 20.9\Omega$$

dc Link Voltage

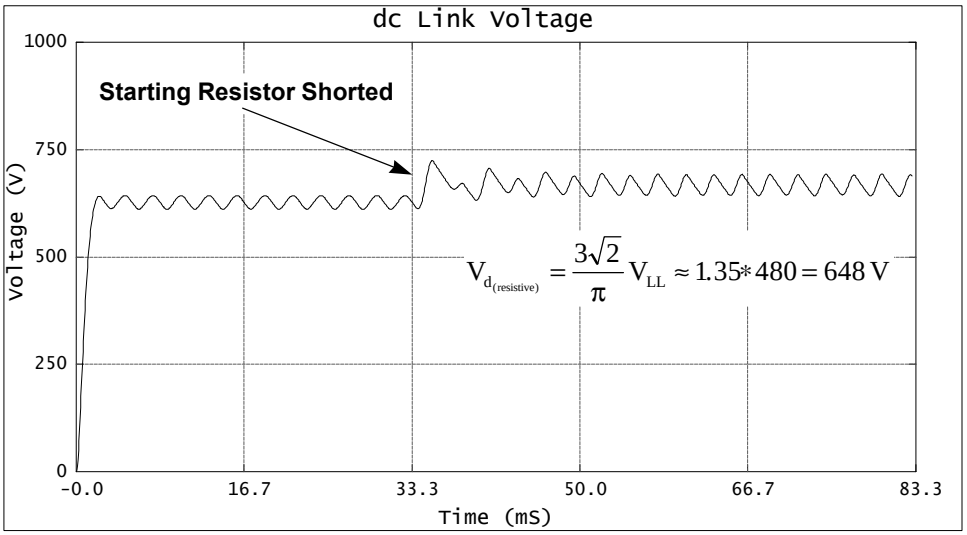

$$V_{d_{(resistive)}} = \frac{3\sqrt{2}}{\pi} V_{LL} \approx 1.35 * 480 = 648\ V$$

ac Line Current

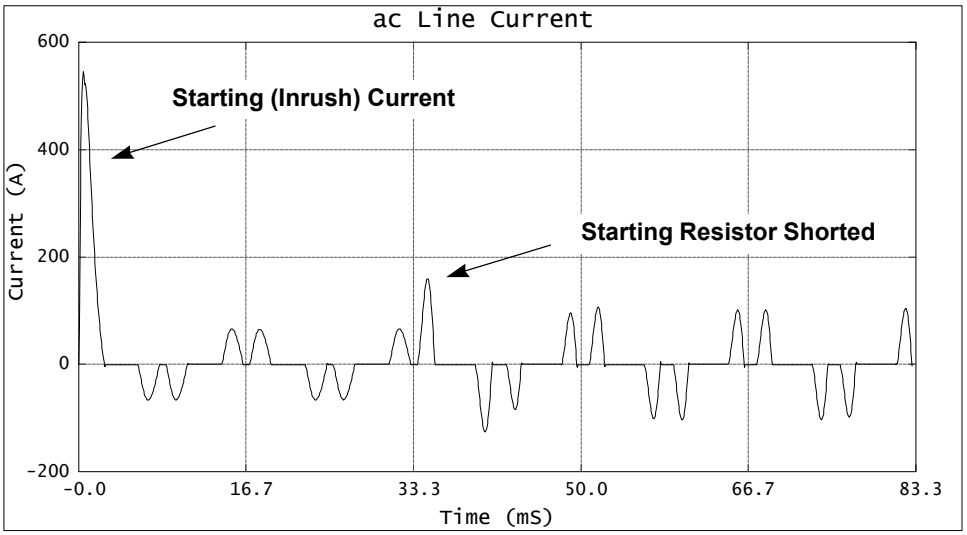

ac Line Current - Harmonic Spectrum

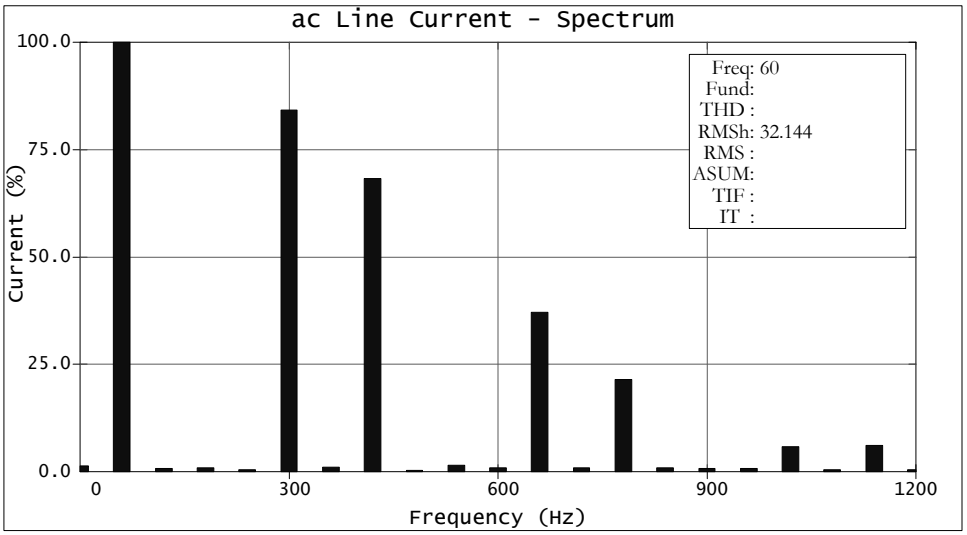

ac Choke Impedance

Standard 3% choke for a 20 HP application:

$$Z_b = \frac{0.480^2}{\left(20/1000\right)} = 11.52\Omega$$

$$X_{choke} = 11.52\Omega * 3\% = 0.3456\Omega$$

$$L_{choke} = \frac{0.3456\Omega}{2\pi 60} = 0.917\text{mH}$$

ac Line Current with 3% Choke

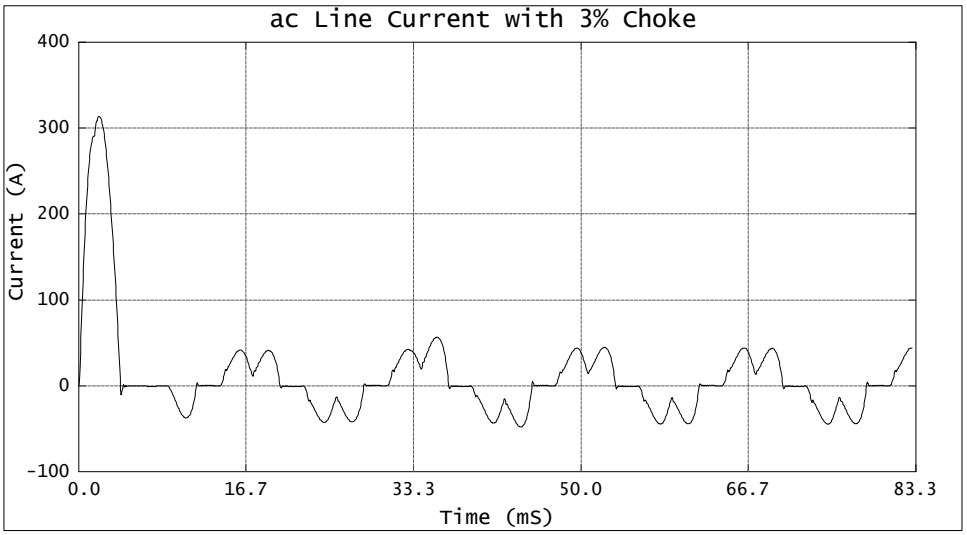

ac Line Current - Harmonic Spectrum

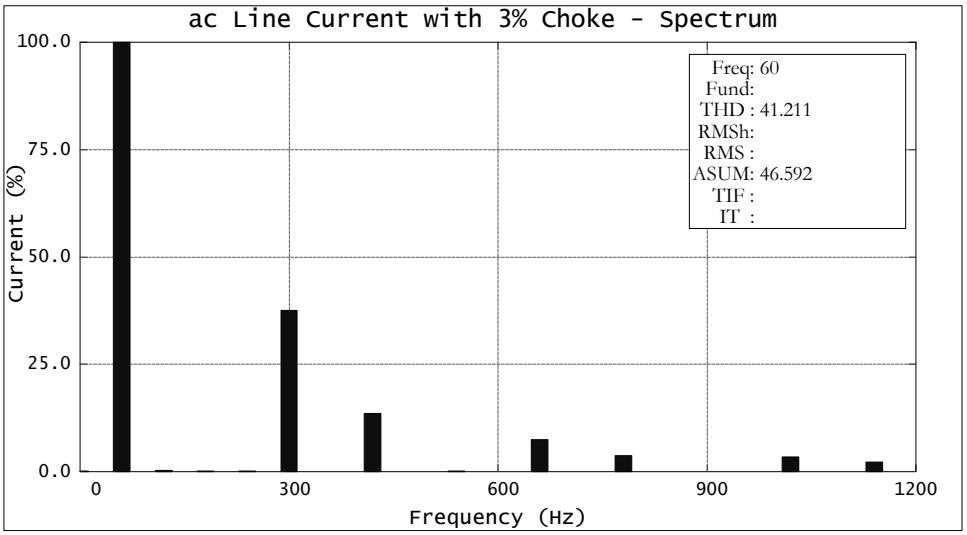

Outline of PWM ASD Case Study

- Introduction
- PWM Adjustable-Speed Drive (ASD) Model
  - System Model
  - PWM Control
  - Waveforms and Spectrums
- PWM ASD Case Studies
  - Harmonic Analysis (Input Current Reduction)
  - Transformer Derating
  - IEEE 519 Evaluation
  - Nuisance Tripping due to Capacitor Switching

Power Quality and Power Electronics *Volume 4, Slide 45*

System Model - PWM ASD

- System Data:
  - 480 Volt System Strength = 10 kA
  - 25 HP Induction Motor, running @ 45 Hz
  - 12,500 µF dc Capacitor, PWM Frequency = 675 Hz

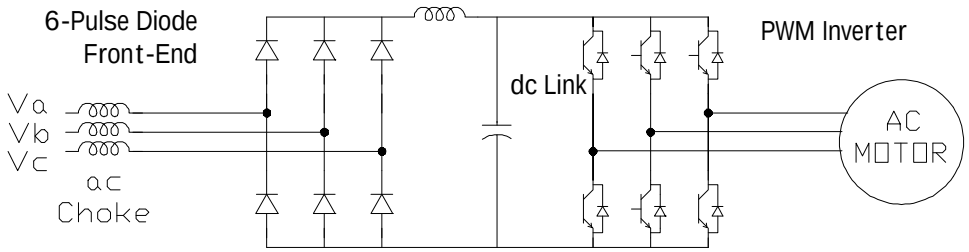

η = 85%, PF = 87% Slip = 2.5%

PWM Control - TACS

- Drive to Run @ 45 Hz
  - want to have a frequency modulation ratio (m_f)= 15
  - switching frequency (f_s) = 45*15=675

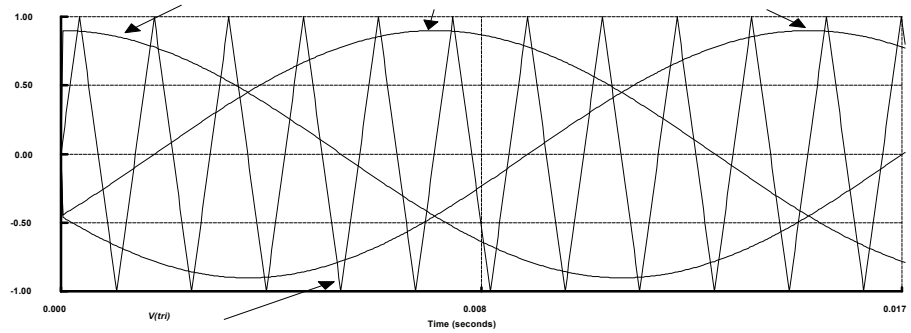

EMTP Data - PWM Switching

```
/TACS
C
C <-------- Triangular voltage "VTRI" (next 5 cards)
C
C Name->xx<-----Ampl<---T(sec)<-Wid(sec)<------------------><---Tstart<----Tstop
23PULS           2.0  1.481E-3 0.7407E-3                      372.0E-6
C .....^xx.........^.........^.........^xxxxxxxxxxxxxxxxxxxx.........^.........^
C
C Name->xx=<---------Fortran Expression---------------------------
98AMPL    =  4.0 * FS
98SQPUL   =  AMPL * (UNITY - PULS)
98VDELTA  =  SQPUL * DELTAT
C .....^xx=...........................
C
C Name->co+<--In1x+<--In2x+<--In3x+<--In4x+<--In5
98VTRI  65+VDELTA
C .....^^^^.....^x^.....^x^.....^x^.....^x^.....^
```

Switching frequency - fs = 675 Hz

Motor frequency - f1 = 45 Hz

Modulation frequency - Mf

= fs/f1 = 15

PWM Inverter Output Voltage - Waveform

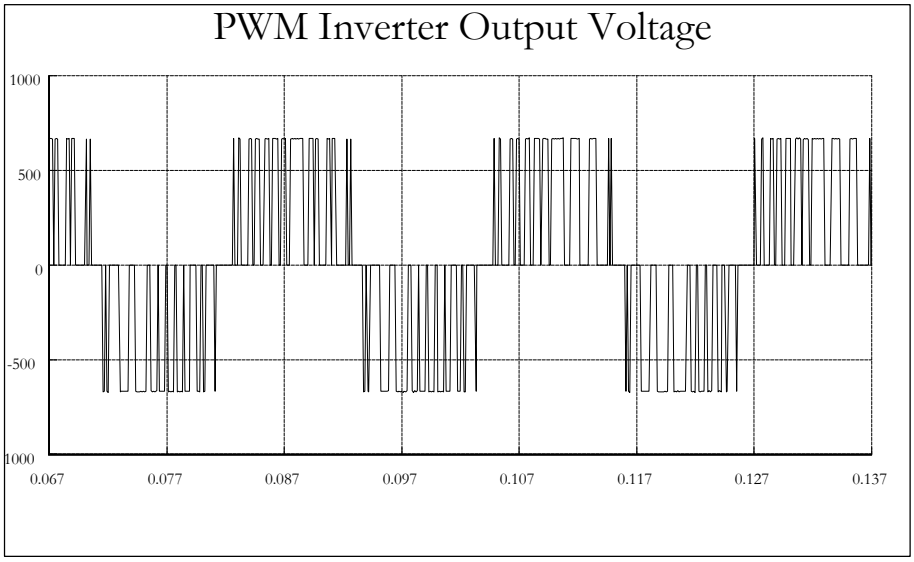

Power Quality and Power Electronics *Volume 4, Slide 53*

PWM Inverter Output Voltage - Spectrum

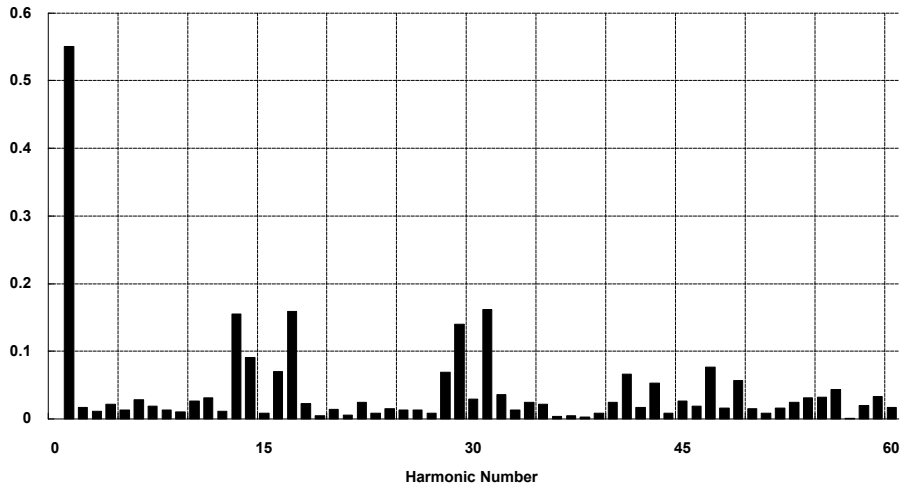

Power Quality and Power Electronics *Volume 4, Slide 54*

PWM ASD EMTP Model - Verification

Comparison of Simulated and Calculated Harmonic Voltage Spectrums:

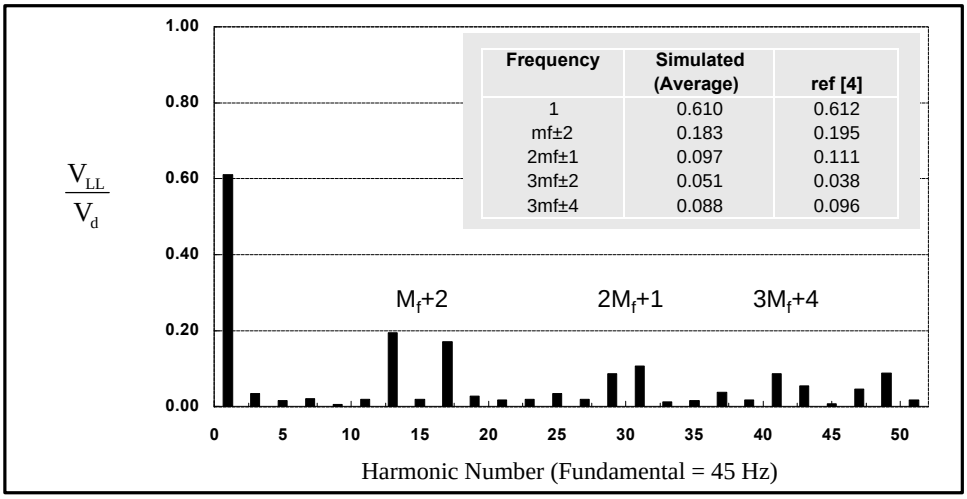

Frequency	Simulated (Average)	ref [4]
1	0.610	0.612
mf±2	0.183	0.195
2mf±1	0.097	0.111
3mf±2	0.051	0.038
3mf±4	0.088	0.096

PWM Inverter Output Current - Waveform

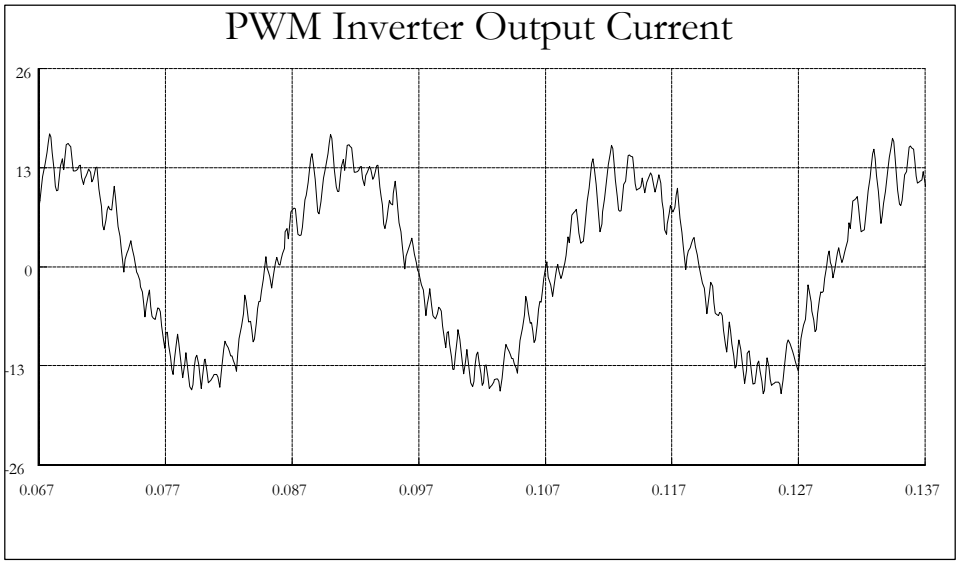

Power Quality and Power Electronics *Volume 4, Slide 56*

PWM Inverter Output Current - Spectrum

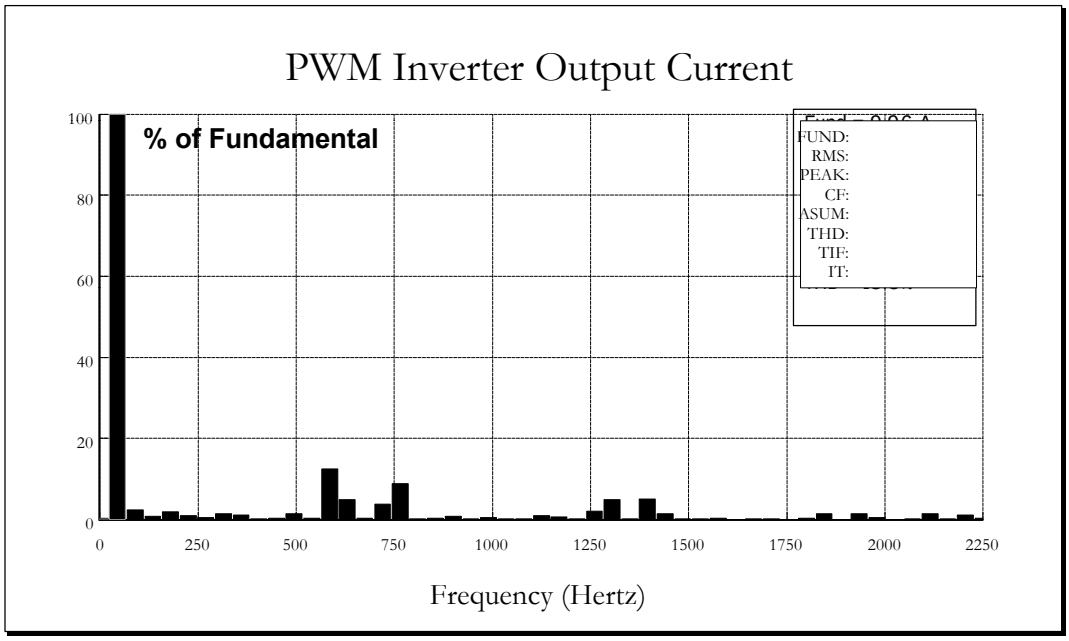

Power Quality and Power Electronics *Volume 4, Slide 57*

PWM ASD EMTP Model - Verification

Comparison of Simulated and Measured Harmonic Current Spectrums:

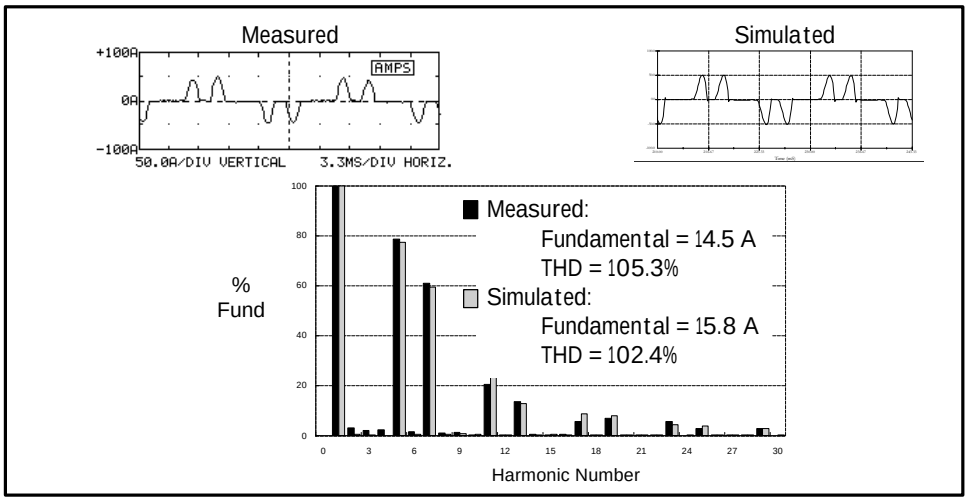

PWM ASD - Voltage Waveforms

$$V_d = \frac{3\sqrt{2}}{\pi} V_{LL} \approx 1.35\, V_{LL} = 1.35 * 480 = 648 \text{ V}$$

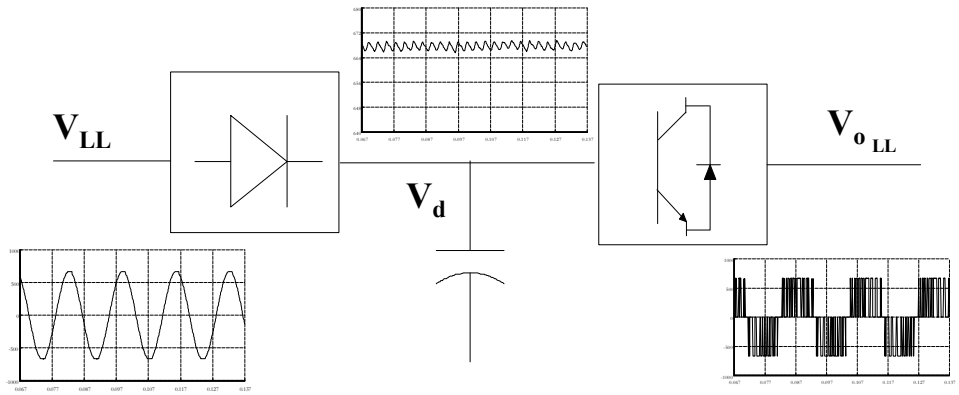

$$V_{o_{LL}} = \frac{\sqrt{3}}{2\sqrt{2}} * m_a * V_d \approx 0.612 * m_a * V_d = 0.612 * 0.90 * 648 = 357 \text{ V}$$

Power Quality and Power Electronics *Volume 4, Slide 59*

PWM ASD - Current Waveforms

$I_{(fund-60)}$ = 8.34 Amps

$I_{(rms)}$ = 13.87 Amps

$I_{(THD)}$ = 132.9% (no choke)

$I_{(fund-45)}$ = 9.98 Amps

$I_{(rms)}$ = 10.13 Amps

$I_{(THD)}$ = 18.9%

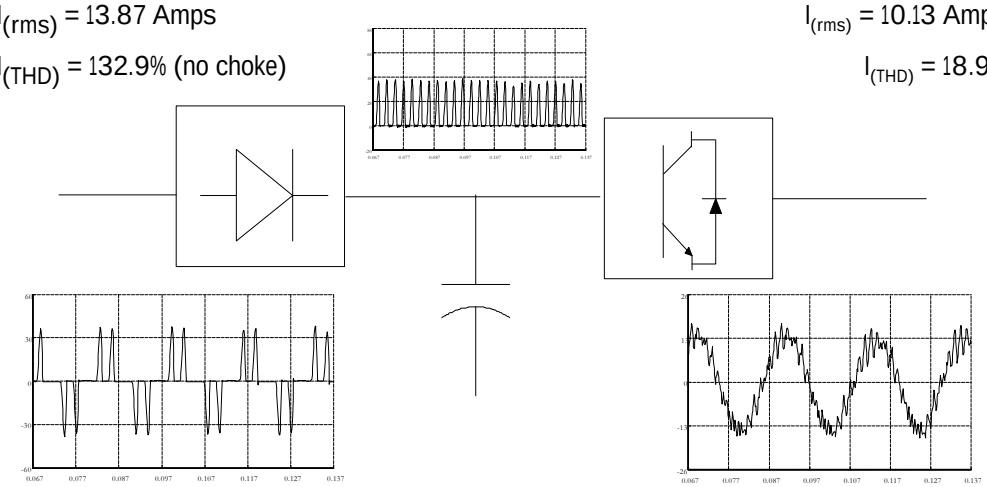

Power Quality and Power Electronics *Volume 4, Slide 60*

Harmonic Current Reduction - Oneline

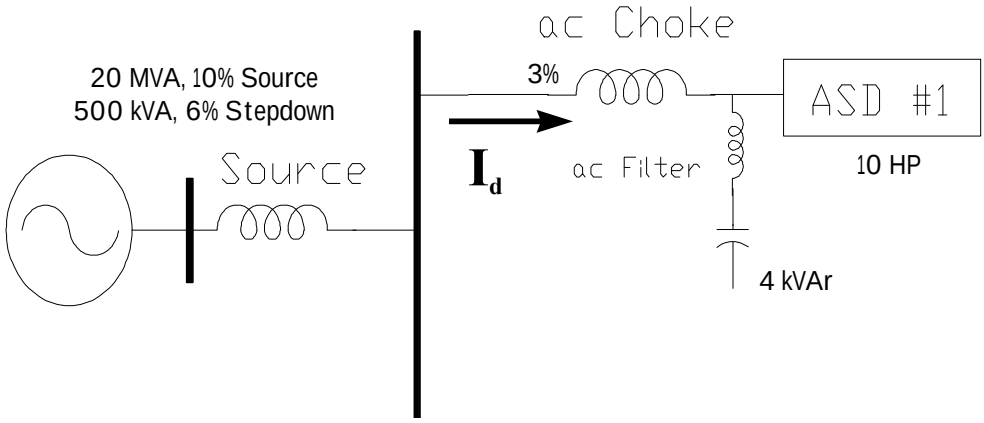

$$X_{choke} = \frac{kV^2}{MVA} = \frac{0.480^2}{0.01} = 23.04\ \Omega * 3\% = 0.6912\ \Omega$$

$$L_{ckoke} = \frac{0.6912}{377} = 1.83\ mH$$

Harmonic Reduction - Summary of Results

Drive Current (I_d)

Description	$I_{(fund)}$	$I_{(rms)}$	$I_{(THD)}$
Case 1 - No Choke or Filter	8.03 A	13.31 A	131.9 %
Case 2 - 3% Choke, No Filter	7.17 A	8.10 A	52.9 %
Case 3 - 3% Choke, 5th Filter	9.06 A	9.33 A	24.5 %

Drive Current - Case 1

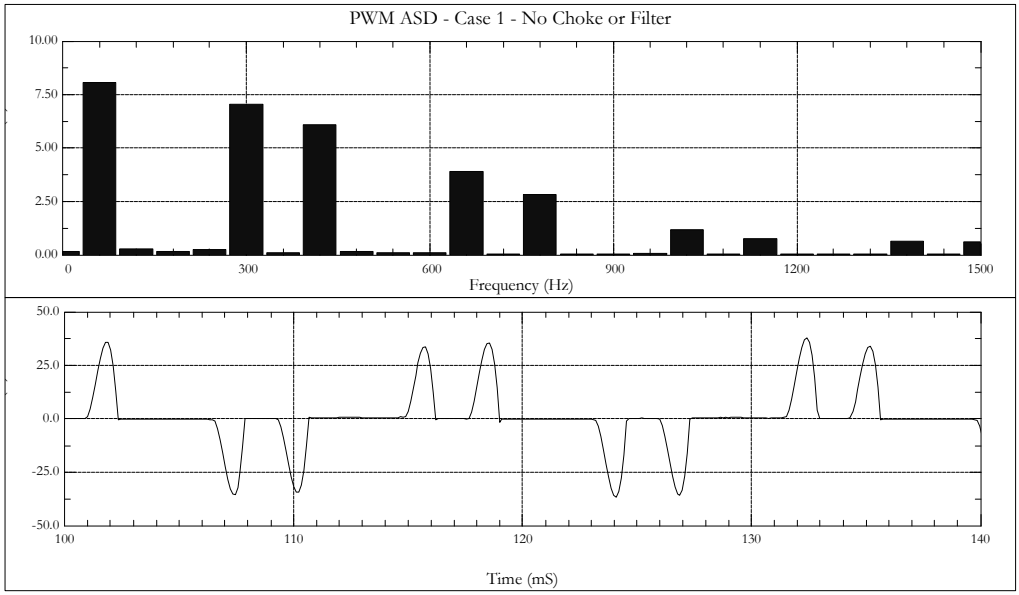

Drive Current - Case 2

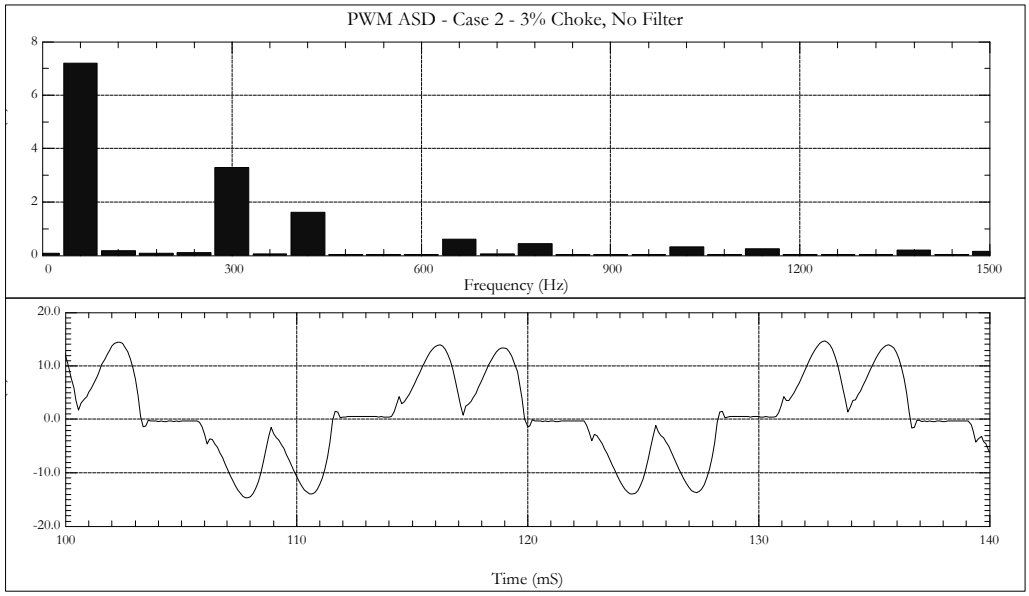

Drive Current - Case 3

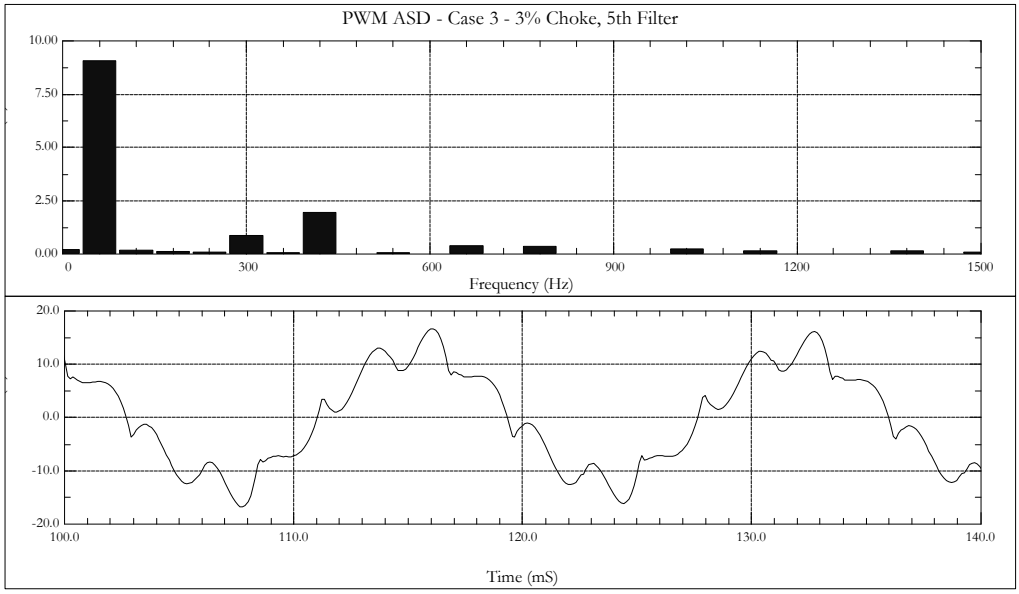

Transformer Derating Case Study

- ANSI/IEEE Standard C57.110-1991
  - Derating method that starts with a given load current spectrum and then determines the amount of this current that would cause the same losses as a purely sinusoidal current.
- K - Factor
  - Ability of a transformer to withstand increased eddy current losses due to harmonic load current.

Transformer Derating - Definitions

ANSI/IEEE Standard C57.110-1991 - Maximum RMS load current that transformer can deliver:

$$\sqrt{\sum I_h^{\,2}} = \sqrt{\frac{1+P_{EC-R}}{1+K*P_{EC-R}}} \quad \text{(pu)}$$

Definition of K-Factor:

$$K = \frac{\sum I_h^{\,2} * h^2}{\sum I_h^{\,2}}$$

IEEE/ANSI Standard C57.110-1986

- C57.110 calculates the amount of a given harmonic load current that would cause losses equivalent to rated (sinusoidal) load current at the transformer's "hot spot".
- Eddy current losses are greatest at hot spot - the inner (low voltage) winding.
- UL is now evaluating transformers for use with nonlinear loads through a **K-Factor** rating.
- K-factor is not discussed in C57.110

K - Factor Calculation

- K-factor is defined as:

$$K = \frac{\sum I_h^2 h^2}{\sum I_h^2}$$

Where: h = harmonic number

I_h = harmonic current

Load loss at hot spot :

$$P_{LL} = I^2 R + P_{EC}$$

Eddy current loss:

$$P_{EC} = C_{EC} I^2 h^2$$

$$P_{LL-R} = I^2 R + P_{EC-R}$$

In per unit: $P_{LL-R} = 1 + P_{EC-R}$

$$P_{LL} = \sum I_h^2 + \left(\sum I_h^2 h^2\right) P_{EC-R}$$

Setting $P_{LL} = P_{LL-R}$

$$1 + P_{EC-R} = \sum I_h^2 + \left(\sum I_h^2 h^2\right) P_{EC-R}$$

P_{LL} = load loss

P_{EC} = Eddy current loss

C_{EC} = proportionality constant

P_{LL-R} = load loss at rated conditions

P_{EC-R} = Eddy current loss at hot spot under rated conditions

Transformer Harmonic Current Delivery

- Substituting the K-factor definition, solving for the sum of the harmonic currents squared and taking the square root of both sides gives the maximum amount of RMS harmonic load current that the transformer can deliver:

$$\sqrt{\sum I_h^2} = \sqrt{\frac{1+P_{EC-R}}{1+K\ P_{EC-R}}}$$

Substituting K-factor definition

$$1+P_{EC-R} = \sum I_h^2 + K\left(\sum I_h^2\right)P_{EC-R}$$

Solving for $\sum I_h^2$

$$\sum I_h^2 = \frac{1+P_{EC-R}}{1+K\left(P_{EC-R}\right)}$$

Determining P_{EC-R}

- Transformer derating depends upon the per unit rated eddy current loss at the hot spot. This factor can be obtained one of three ways:
  - Can be obtained from the transformer designer
  - Can be estimated from transformer test data using a procedure given in C57.110
  - A third option is to use typical values based on the transformer type and size

Type	MVA	kV	$\%P_{EC-R}$
Dry	<=1		3-8
	>=1.5	5 kV HV	12-20
	<=1.5	15 kV HV	9-15
Oil Filled	<=2.5	480 V LV*	1
	>=2.5,<=5		1-5
	>5		9-15

* Applies to any transformer with LV sheet type winding

Above table taken from "Adjustable Speed Drive and Power Rectifier Harmonics, Their Effect on Power System Components", D.E. Rice, IEEE No. PCIC-84-52

Simulation Results

Harmonic Number	Frequency (Hz)	No Xfmr I(pu)	3% Xfmr I(pu)
1	60	1.000	1.000
3	180	0.020	0.010
5	300	0.920	0.470
7	420	0.830	0.230
9	540	0.010	0.000
11	660	0.620	0.090
13	780	0.500	0.060
15	900	0.010	0.000
17	1020	0.300	0.050
19	1140	0.210	0.030
21	1260	0.010	0.000
23	1380	0.100	0.030
25	1500	0.090	0.020

Results:

Totals:	No Xfmr	3% Xfmr
THD:	152.4%	53.9%
K Factor:	59.3	9.7
C57.110-1986:	0.43 pu	0.78 pu

Harmonic Spectrums for cases with no isolation transformer and with a 3% isolation transformer.

IEEE 519 Evaluation Case Study

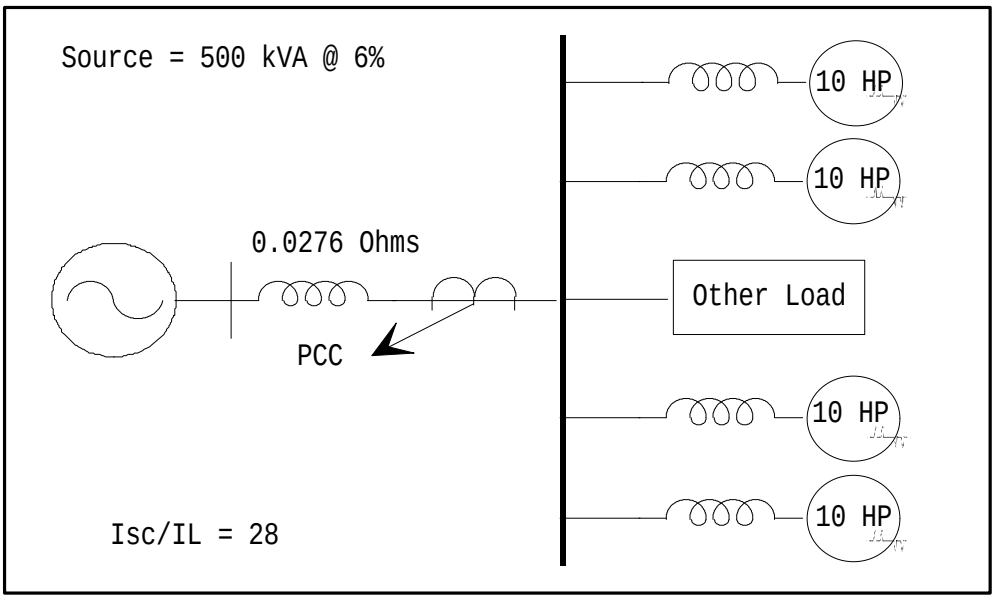

Power Quality and Power Electronics *Volume 4, Slide 73*

IEEE 519 Current Limits

Harmonic Current Limits - Customer Responsibility

Isc/I(load)	<11	11<h<17	17<h<23	23<h<35	35<h	THD
<20	4.0	2.0	1.5	0.6	0.3	5.0
20 - 50	7.0	3.5	2.5	1.0	0.5	8.0
50 - 100	10.0	4.5	4.0	1.5	0.7	12.0
	12.0	5.5	5.0	2.0	1.0	15.0
>1000	15.0	7.0	6.0	2.5	1.4	20.0

Values shown are in percent of maximum average demand load current

SCR = short circuit ration (utility short circuit current at point of common coupling divided by customer maximum average demand load current

Summary of Simulation Results

Summary of Case Results for IEEE 519 Evaluation with
No Choke Included:

Harmonic Number h	Harmonic Current (% Fund) Ih	Harmonic Current (Amps) Ih	System Impedance (Ohms) Xh	Harmonic Voltage (Volts) Vh	Harmonic Current (% Demand) Id	IEEE 519 Current Limit (%) (Table 10.2)	Load Current Exceeds Limit
5	92.0	46.0	0.138	6.3	12.8	7.0	Exceeds
7	83.0	41.5	0.193	8.0	11.5	7.0	Exceeds
11	62.0	31.0	0.304	9.4	8.6	3.5	Exceeds
13	50.0	25.0	0.359	9.0	6.9	3.5	Exceeds
17	30.0	15.0	0.469	7.0	4.2	2.5	Exceeds
19	21.0	10.5	0.524	5.5	2.9	2.5	Exceeds
23	10.0	5.0	0.635	3.2	1.4	1.0	Exceeds
25	9.0	4.5	0.690	3.1	1.3	1.0	Exceeds
Totals:	**152.4**			**7.0**	**21.2**	**8.0**	**Exceeds**

Power Quality and Power Electronics *Volume 4, Slide 75*

Summary of Simulation Results - cont

Summary of Case Results for IEEE 519 Evaluation with a 3% Choke Included:

Harmonic Number h	Harmonic Current (% Fund) Ih	Harmonic Current (Amps) Ih	System Impedance (Ohms) Xh	Harmonic Voltage (Volts) Vh	Harmonic Current (% Demand) Id	IEEE 519 Current Limit (%) (Table 10.2)	Load Current Exceeds Limit
5	47.0	23.5	0.138	3.2	6.5	7.0	OK
7	23.0	11.5	0.193	2.2	3.2	7.0	OK
11	9.0	4.5	0.304	1.4	1.3	3.5	OK
13	6.0	3.0	0.359	1.1	0.8	3.5	OK
17	5.0	2.5	0.469	1.2	0.7	2.5	OK
19	3.0	1.5	0.524	0.8	0.4	2.5	OK
23	3.0	1.5	0.635	1.0	0.4	1.0	OK
25	2.0	1.0	0.690	0.7	0.3	1.0	OK
Totals:	**53.9**			**1.7**	**7.5**	**8.0**	**OK**

Nuisance Tripping of ASDs - Case Study

System One-Line Diagram:

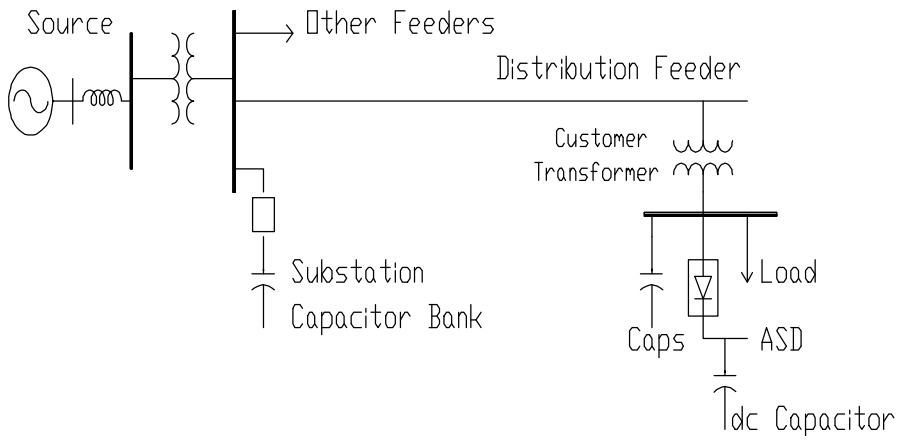

ASDTRIP.DAT

ref: IEEE Paper 91 WM 086-9 PWRD

System Model

System source strength (substation):	200 MVA
Switched capacitor bank size:	3.0 MVAr
Total feeder load:	5 MW
Customer transformer size:	1500 kVA, 6%
Customer resistive load:	300 kW
dc capacitor size:	5000 μF
Drive rating:	10 HP

Power Quality and Power Electronics *Volume 4, Slide 78*

ASD Components

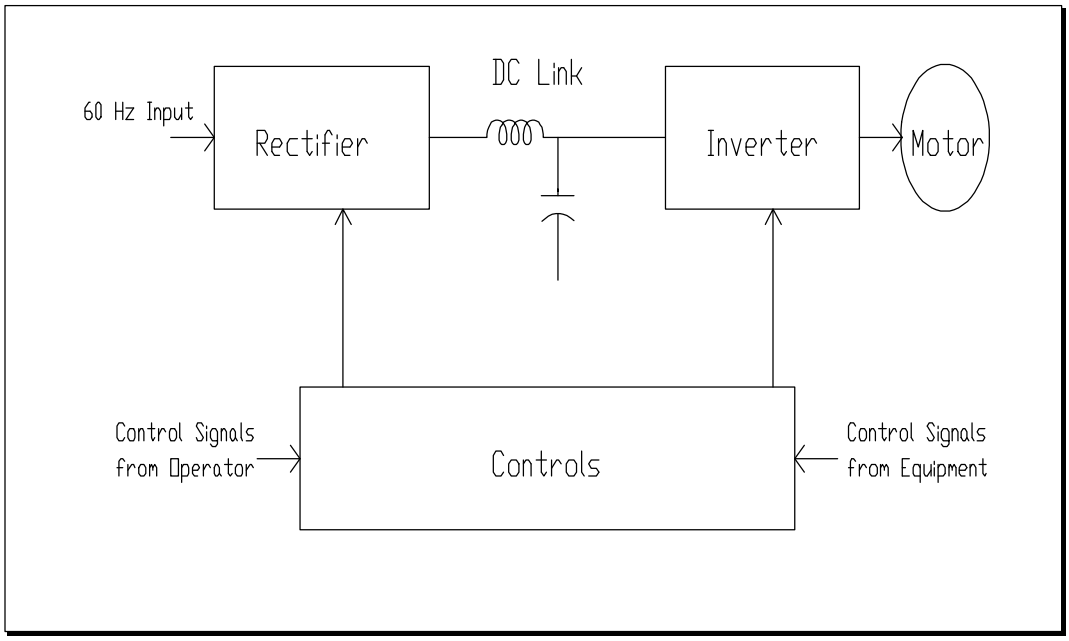

Power Quality and Power Electronics *Volume 4, Slide 79*

The dc link capacitor is very sensitive to transient voltages on the ac power side. It is not uncommon for the dc overvoltage control to cause tripping of the drive whenever the dc voltage exceeds 1.2 pu (typical value).

Simplified ASD Circuit Diagram

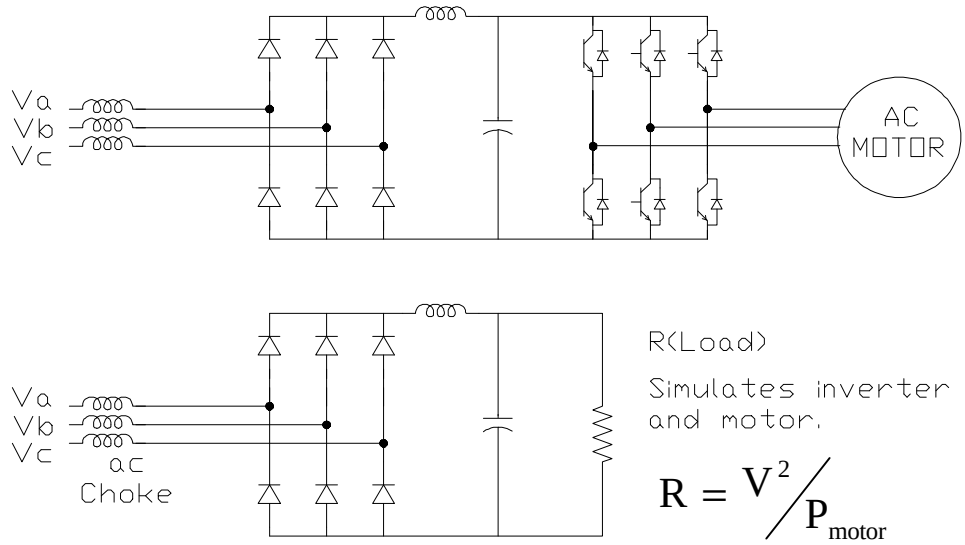

Nuisance Tripping Waveforms

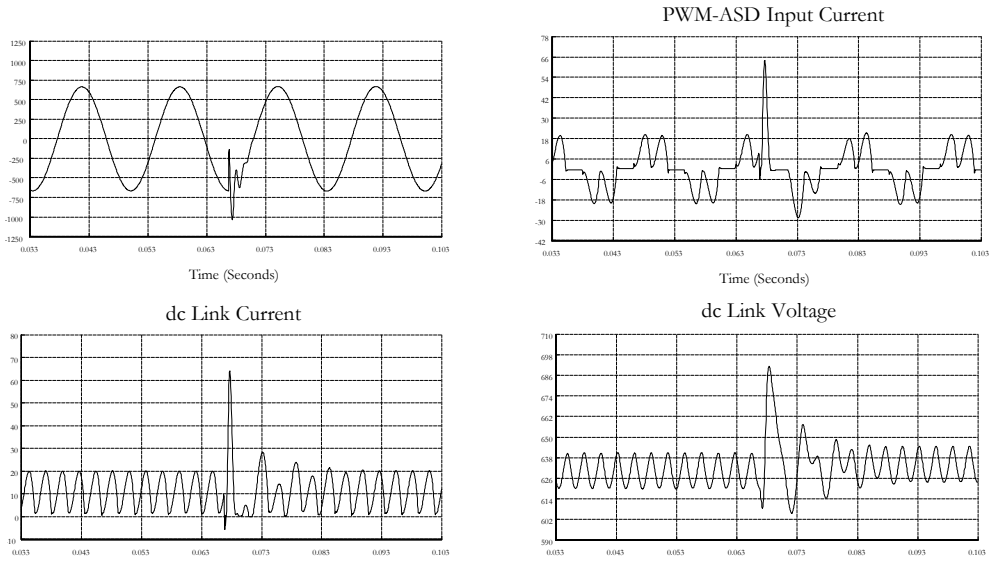

Power Quality and Power Electronics *Volume 4, Slide 81*

Measured drive current during utility capacitor switching:

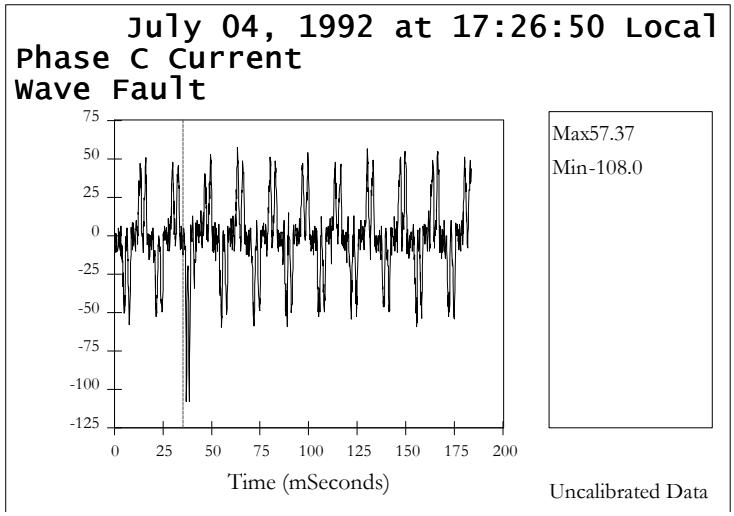

Effect of ac Side Choke

- Inductance on the ac side, in the form of an isolation transformer or **simple inductive choke**, has the most dramatic effect on the current surge because it introduces a large impedance into the circuit where the current flows.

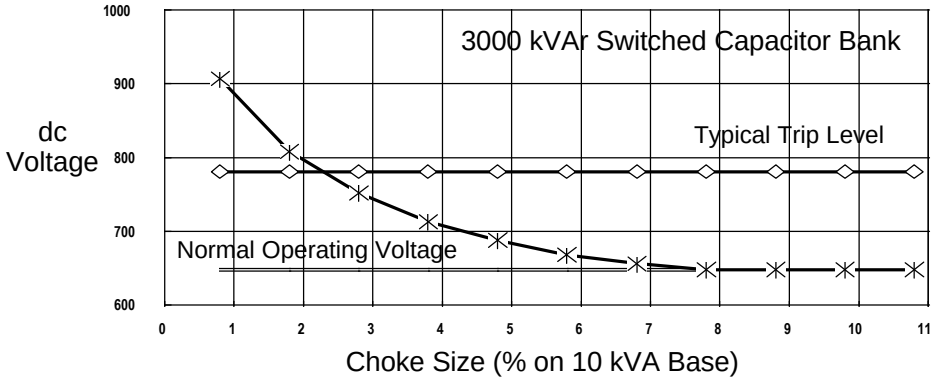

Effect of Choke on dc Link Overvoltage

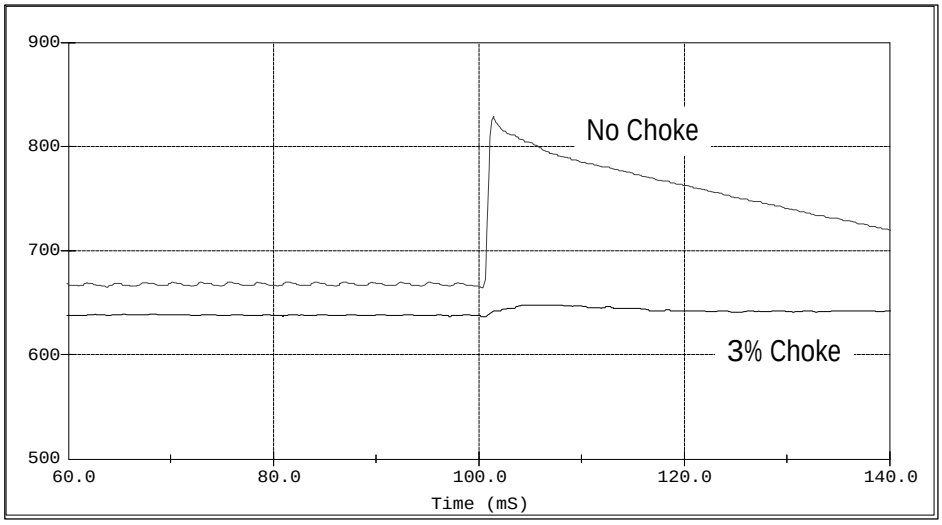

EMTP Lab Exercise

- Oneline diagram:

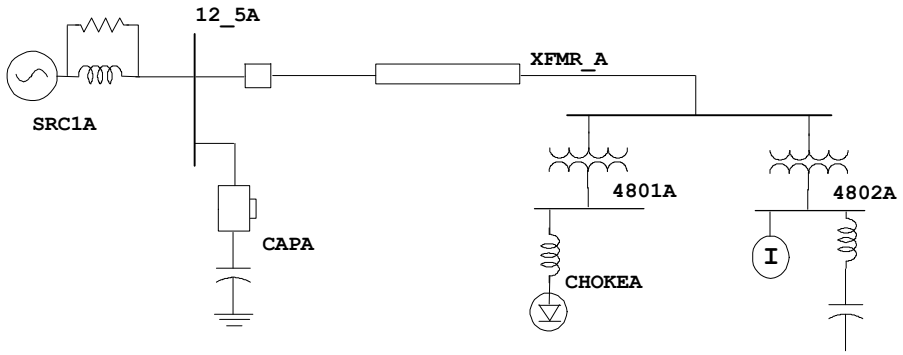

From the 1995 Power Quality Analysis Using PCs
Class at the Univeristy of Wisconsin-Madison

EMTPLAB.DAT

Source / Capacitor Bank Representation

- 12.5kV Equivalent Source / 3 MVAr Capacitor Bank

Source Impedance - Capacitor Bank Interaction

Voltage: 12.5 kV Bus: 12_5x

	R	X		R	X		Base	
Z1:	7.500	45.000	Z0:	10.000	61.500	% @	100	MVA
							1.56	Ω
I3P:	10124.352	-80.54	IPG:	9024.10	-80.63	Amps	4618.80	A
	Amps	Deg		Amps	Deg			

	R	L		R	L	
Z1:	0.117	1.865	Z0:	0.156	2.549	Ω & mH

Capacitor Bank Size: 3 MVAr @ 12.5 kV

Xc: 52.08 Ω 50.930 uF Delta C: 16.977 uF

Ipk: 1686.57 A 516.40 Hz & Zs: 6.05 Ω

Power Quality and Power Electronics *Volume 4, Slide 85*

Substation / Feeder Load

- 5MW, 0.95 PF Load, 75% @ Substation, 25% @ End

MVA / PF Load Data

Voltage:	12.5	kV	MVA:	3.75		PF:	0.95
							18.19 °
	R	L		R	X		
Delta Z1:	118.750	103.531	Z0:	N/A	N/A		Ω & mH
	R	L		R	L		
Wye Z1:	39.583	34.510	Z0:	N/A	N/A		Ω & mH

MVA / PF Load Data

Voltage:	12.5	kV	MVA:	1.25		PF:	0.95
							18.19 °
	R	L		R	X		
Delta Z1:	356.250	310.593	Z0:	N/A	N/A		Ω & mH
	R	L		R	L		
Wye Z1:	118.750	103.531	Z0:	N/A	N/A		Ω & mH

Power Quality and Power Electronics *Volume 4, Slide 86*

Distribution Feeder

- 5 Miles - Overhead Line

Distribution Circuit Line Data - EMTP PI-Circuit Format

Voltage: 12.5 kV From Bus: 12_5x To Bus: XFMRx

Length: 5.00 miles Number of Sections: 1 5 mi/section

	R1	X1	R0	X0	
Line Impedance:	0.1150	0.1386	0.2328	0.4043	Ω / 1000 Ft
	0.6072	0.7318	1.2292	2.1347	Ω / mi

	R1	X1	R0	X0	
Total Line Impedance:	3.036	3.659	6.146	10.674	Ω

	R1	L1	R0	L0
Section Impedance:	3.0360	9.7057	6.1459	28.3117
	Ω	Ω	mH	mH

Step-down Transformer

- 1500kVA, 12.5kV/480 V, Delta/Wye-Gnd
  Z_{tx} = 5%, X/R = 10

EMTP Saturable Transformer Model:

2 Winding Transformer - Delta / Wye-Gnd

High Side kV	Low Side kV	Xfmr MVA	R1 % @ MVA	X1 % @ MVA	HS Base	LS Base
12.50	0.48	1.5	0.500	5.000	312.5	0.2

R - HS W	L - HS mH	R - LS W	L - LS mH	V - HS kV	V - LS kV
0.7813	20.723	0.0004	0.010	12.50	0.277

R1 % @ 100	X1 % @ 100
33.33	15.36

```
C  ##################################################################
C
C        Title:  Using PCs to Solve PQ Problems
C                Lab Example #1 - EMTP Data File Creation
C
C           By:  Thomas Grebe, Electrotek Concepts, Inc.
C         Date:  February, 1994
C
C         Case:  Energize 3.0MVAr, 12.5kV capacitor bank
C                480 volt load = 300kW
C                12.5kV load = 5.0MW total
C
C   Conditions:  0.5% cable impedance, 0% choke impedance
C
C      Remarks:  dc bus components: capacitor = 1200uF
C                                   motor = 42.25 Ohms (10 HP)
C
C                Diode-bridge on 480 volt, bus #1
C                200 HP dc drive on 480 volt bus #2 (constant current)
C
C  ##################################################################
BEGIN NEW DATA CASE
C
C <--------------------------------------------------Misc Data------------------
C
C ----dt<---Tmax<---Xopt<---Copt
  50.E-6 167E-03
C .....^.......^.......^.......^
C -Iprnt<--Iplot<-Idoubl<-Kssout<-Maxout<---Ipun<-Memsav<---Icat<-Nenerg
    1001       1       1       3       1       0       0       1       0
C .....^.......^.......^.......^.......^.......^.......^.......^.......^
C --Kchg<---Mult<---Kchg<---Mult<---Kchg<---Mult<---Kchg<---Mult<---Kchg<---Mult
C      1    5001    3330       1    3350    5001
C .....^.......^.......^.......^.......^.......^.......^.......^.......^.......^
C
C
C <--------------------------------------------------System Data------------------
C
/SOURCE
C
C <-------- Source Voltage 12.5kV RMS (10.21kV pk - increased by 5%)
C
C Bus--><I<Amplitude<Frequency<--ToiPhio<-------A1<------T1><---Tstart<----Tstop
14 SRC1A    10716.52     60.00      0.00                       -1.0E-03     9999.
14 SRC1B    10716.52     60.00   -120.00                       -1.0E-03     9999.
14 SRC1C    10716.52     60.00    120.00                       -1.0E-03     9999.
C .....^.^.........^.........^.........^.........^........^..........^.........^
C
/BRANCH
C
C <-------- 12.5kV Equivalent
C
C <---Nodes--><---Refer--><-Ohms<---------mH
C <-Bus1<-Bus2<-Bus3<-Bus4<----R<----------L
51 SRC1A 12_5A             0.156       2.549
52 SRC1B 12_5B             0.117       1.865
53 SRC1C 12_5C
C .....^.....^xxxxxxxxxxxx.....^...........^
C
C <---Nodes--><---Refer--><-ohms<---mH<---uF<--------------------------------Out
C <-Bus1<-Bus2<-Bus3<-Bus4<----R<----L<----C                                 V
   SRC1A 12_5A              50.0
   SRC1B 12_5B              50.0
   SRC1C 12_5C              50.0
C .....^.....^.....^.....^.....^.....^.....^.................................^
```

$$V_s = 12.5\text{kV} * \left(\sqrt{2}/\sqrt{3}\right) * 105 = 10716.52\text{V}$$

$$Z_{base} = \frac{kV^2}{MVA} = \frac{12.5^2}{100} = 156\Omega$$

```
C <-------- 3.0 MVAr, 12.5kV Capacitor Bank
C
C <---Nodes--><---Refer--><-ohms<---mH<---uF<-------------------------------Out
C <-Bus1<-Bus2<-Bus3<-Bus4<----R<----L<----C                                 V
    CAPA                                50.93
    CAPB                                50.93
    CAPC                                50.53
C .....^.....^.....^.....^.....^.....^.....^.....^.....^.....^.....^.....^
C
C <-------- 12.5kV Capacitor Breaker - Preinsertion Device
C
C <---Nodes--><---Refer--><-ohms<---mH<---uF<-------------------------------Out
C <-Bus1<-Bus2<-Bus3<-Bus4<----R<----L<----C                                 V
   12_5A  PREA             0.001
   12_5B  PREB             0.001
   12_5C  PREC             0.001
C .....^.....^.....^.....^.....^.....^.....^.....^.....^.....^.....^.....^
C
/SWITCH
C
C <-------- 12.5kV Capacitor Breaker - Preinsertion Contact
C
C BUS-->BUS--><---TCLOSE<----TOPEN<-------IE<----FLASH<--REQUEST<-----TARGET<--O
    PREA  CAPA 100.00E-3      9999                                           1
    PREB  CAPB 100.00E-3      9999
    PREC  CAPC 100.00E-3      9999
C .....^.....^.........^.........^.........^.........^.........^...........^...^
C
C <-------- 12.5kV Capacitor Breaker - Shorting Contact
C
C BUS-->BUS--><---TCLOSE<----TOPEN<-------IE<----FLASH<--REQUEST<-----TARGET<--O
   12_5A  CAPA 108.33E-3      9999                                           1
   12_5B  CAPB 108.33E-3      9999
   12_5C  CAPC 108.33E-3      9999
C .....^.....^.........^.........^.........^.........^.........^...........^...^
C
/BRANCH
C
C <-------- 12.5kV Load (5 MW - 75% @ sub, 25% @ end of feeder) PF = 0.95
C
C <---Nodes--><---Refer--><-ohms<---mH<---uF<-------------------------------Out
C <-Bus1<-Bus2<-Bus3<-Bus4<----R<----L<----C                                 V
   12_5A 12_5B             118.8 103.5
   12_5B 12_5C             118.8 103.5
   12_5C 12_5A             118.8 103.5
C .....^.....^.....^.....^.....^.....^.....^.....^.....^.....^.....^.....^
C
C <-------- 12.5kV Distribution Circuit
C
C <---Nodes--><---Refer--><-Ohms<---------mH
C <-Bus1<-Bus2<-Bus3<-Bus4<----R<----------L
51 12_5A XFMRA             6.146      28.312
52 12_5B XFMRB             3.036       9.706
53 12_5C XFMRC
C .....^.....^xxxxxxxxxxxx.....^...........^
C
C <-------- 12.5kV Load (5 MW - 75% @ sub, 25% @ end of feeder) PF = 0.95
C
C <---Nodes--><---Refer--><-ohms<---mH<---uF<-------------------------------Out
C <-Bus1<-Bus2<-Bus3<-Bus4<----R<----L<----C                                 V
   XFMRA XFMRB             356.3 310.6
   XFMRB XFMRC             356.3 310.6
   XFMRC XFMRA             356.3 310.6
C .....^.....^.....^.....^.....^.....^.....^.....^.....^.....^.....^.....^
```

$$C_Y = \frac{MVAr}{\omega kV^2} = \frac{3.0}{2\pi 60 * 12.5^2} = 50.93\mu F$$

$$Z_{load} = \frac{kV^2}{MVA} = \frac{12.5^2}{3.75/3} = 125\Omega @ \cos^{-1}(0.95)^\circ$$

```
C
C <-------- Step-Down Transformer #1 (1500kVA, Ztx=5%, 12.5kV/480V delta/wye-gnd)
C
C Transformer-<--Ref<---><--Iss<--Phi<-Name<-Rmag
  TRANSFORMER                          TX01
C ...........^.....^      .....^.....^.....^.....^
            9999
C <---Nodes--><----------><-ohms<---mH<---kV
C <-Bus1<-Bus2<--Ignore--><----R<----L<-volt<----------------------------------O
01 XFMRA XFMRB             0.781 20.72 12.50
02 4801A                   0.001 0.010 0.277
C .....^.....^            .....^.....^.....^                                  ^
C
C Transformer-<--Ref<---><--Iss<--Phi<-Name<-Rmag
  TRANSFORMER   TX01                   TX02
C ...........^.....^      .....^.....^.....^.....^
C <---Nodes--><----------><-ohms<---mH<---kV
C <-Bus1<-Bus2<--Ignore--><----R<----L<-volt<----------------------------------O
01 XFMRB XFMRC
02 4801B
C .....^.....^            .....^.....^.....^                                  ^
C
C Transformer-<--Ref<---><--Iss<--Phi<-Name<-Rmag
  TRANSFORMER   TX01                   TX03
C ...........^.....^      .....^.....^.....^.....^
C <---Nodes--><----------><-ohms<---mH<---kV
C <-Bus1<-Bus2<--Ignore--><----R<----L<-volt<----------------------------------O
01 XFMRC XFMRA
02 4801C
C .....^.....^            .....^.....^.....^                                  ^
C
C <-------- Step-Down Transformer #2 (1500kVA, Ztx=5%, 12.5kV/480V delta/wye-gnd)
C
C Transformer-<--Ref<---><--Iss<--Phi<-Name<-Rmag
  TRANSFORMER                          TX04
C ...........^.....^      .....^.....^.....^.....^
            9999
C <---Nodes--><----------><-ohms<---mH<---kV
C <-Bus1<-Bus2<--Ignore--><----R<----L<-volt<----------------------------------O
01 XFMRA XFMRB             0.781 20.72 12.50
02 4802A                   0.001 0.010 0.277
C .....^.....^            .....^.....^.....^                                  ^
C
C Transformer-<--Ref<---><--Iss<--Phi<-Name<-Rmag
  TRANSFORMER   TX04                   TX05
C ...........^.....^      .....^.....^.....^.....^
C <---Nodes--><----------><-ohms<---mH<---kV
C <-Bus1<-Bus2<--Ignore--><----R<----L<-volt<----------------------------------O
01 XFMRB XFMRC
02 4802B
C .....^.....^            .....^.....^.....^                                  ^
C
C Transformer-<--Ref<---><--Iss<--Phi<-Name<-Rmag
  TRANSFORMER   TX04                   TX06
C ...........^.....^      .....^.....^.....^.....^
C <---Nodes--><----------><-ohms<---mH<---kV
C <-Bus1<-Bus2<--Ignore--><----R<----L<-volt<----------------------------------O
01 XFMRC XFMRA
02 4802C
C .....^.....^            .....^.....^.....^                                  ^
C
C <-------- 480 Volt Bus #1 Load (300kW)
C
C <---Nodes--><---Refer--><-ohms<---mH<---uF<--------------------------------Out
C <-Bus1<-Bus2<-Bus3<-Bus4<----R<----L<----C                                  V
   4801A 4801B              2.30                                             2
   4801B 4801C              2.30                                             2
   4801C 4801A              2.30                                             2
C .....^.....^.....^.....^.....^.....^.....^.................................^
```

```
C <-------- 480 Volt Bus #2 Load (300kW)
C
C <---Nodes--><---Refer--><-ohms<---mH<---uF<-------------------------------Out
C <-Bus1<-Bus2<-Bus3<-Bus4<----R<----L<----C                                 V
   4802A 4802B              2.30                                            2
   4802B 4802C              2.30
   4802C 4802A              2.30
C .....^.....^.....^.....^.....^.....^.....^.................................^
C
/SWITCH
C
C
C <-------- 480 Capacitor Switch (or fuse blowing)
C
C BUS-->BUS--><---TCLOSE<----TOPEN<-------IE<----FLASH<--REQUEST<-----TARGET<--O
   4802A  FILA -10.00E-3 250.0E-03                                           1
   4802B  FILB -10.00E-3 250.0E-03                                           1
   4802C  FILC -10.00E-3 250.0E-03                                           1
C .....^.....^.........^.........^.........^.........^.........^...........^...^
C
/BRANCH
C
C <-------- 480 Volt Bus #2 Capacitor Bank - Filter Inductor
C
C <---Nodes--><---Refer--><-ohms<---mH<---uF<-------------------------------Out
C <-Bus1<-Bus2<-Bus3<-Bus4<----R<----L<----C                                 V
    FILA  PFCA            0.0001                                             2
    FILB  PFCB            0.0001
    FILC  PFCC            0.0001
C .....^.....^.....^.....^.....^.....^.....^.................................^
C
C <-------- 480 Volt Bus #2 Capacitor Bank (250kVAr)
C
C <---Nodes--><---Refer--><-ohms<---mH<---uF<-------------------------------Out
C <-Bus1<-Bus2<-Bus3<-Bus4<----R<----L<----C                                 V
    PFCA  PFCB                          959.4                                2
    PFCB  PFCC                          959.4
    PFCC  PFCA                          959.4
C .....^.....^.....^.....^.....^.....^.....^.................................^
    PFCA                                 0.01
    PFCB                                 0.01
    PFCC                                 0.01
C .....^.....^.....^.....^.....^.....^.....^.................................^
```

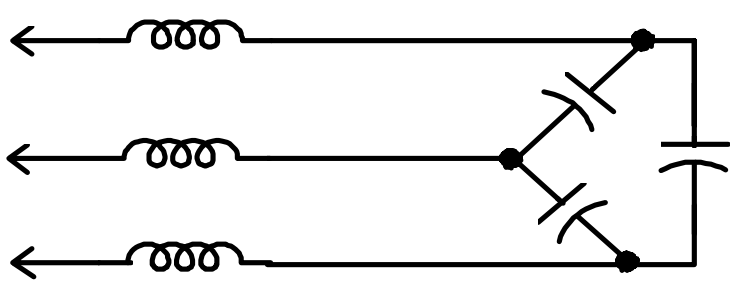

$$X_f = \frac{X_c}{n^2} = \frac{\left(kV^2/MVA\right)}{n^2} = \frac{\left(0.480^2/0.250\right)}{n^2} = _____\ \Omega$$

```
C <-------- 480 Volt Bus #2 Load (300kW)
C
C <---Nodes--><---Refer--><-ohms<---mH<---uF<-------------------------------Out
C <-Bus1<-Bus2<-Bus3<-Bus4<----R<----L<----C                                 V
   4802A 4802B              2.30                                            2
   4802B 4802C              2.30
   4802C 4802A              2.30
C .....^.....^.....^.....^.....^.....^.....^.................................^
C
/SWITCH
C
C
C <-------- 480 Capacitor Switch (or fuse blowing)
C
C BUS-->BUS--><---TCLOSE<----TOPEN<-------IE<----FLASH<--REQUEST<-----TARGET<--O
   4802A  FILA -10.00E-3 250.0E-03                                           1
   4802B  FILB -10.00E-3 250.0E-03                                           1
   4802C  FILC -10.00E-3 250.0E-03                                           1
C .....^.....^.........^.........^.........^.........^.........^...........^...^
C
/BRANCH
C
C <-------- 480 Volt Bus #2 Capacitor Bank - Filter Inductor
C
C <---Nodes--><---Refer--><-ohms<---mH<---uF<-------------------------------Out
C <-Bus1<-Bus2<-Bus3<-Bus4<----R<----L<----C                                 V
    FILA  PFCA            0.0001                                            2
    FILB  PFCB            0.0001
    FILC  PFCC            0.0001
C .....^.....^.....^.....^.....^.....^.....^.................................^
C
C <-------- 480 Volt Bus #2 Capacitor Bank (250kVAr)
C
C <---Nodes--><---Refer--><-ohms<---mH<---uF<-------------------------------Out
C <-Bus1<-Bus2<-Bus3<-Bus4<----R<----L<----C                                 V
    PFCA  PFCB                          959.4                                2
    PFCB  PFCC                          959.4
    PFCC  PFCA                          959.4
C .....^.....^.....^.....^.....^.....^.....^.................................^
    PFCA                                 0.01
    PFCB                                 0.01
    PFCC                                 0.01
C .....^.....^.....^.....^.....^.....^.....^.................................^
C
C <-------- Low Voltage Cable Impedance (connection to drive)
C
$VINTAGE, 1
C <---Nodes--><----------><-----------Ohms<-------------mH<-------------uF<--Out
C Bus1->Bus2-><----------><--------------R<--------------L<--------------C     V
   4801ACHOKEA                      0.0001          0.3056
   4801BCHOKEB                      0.0001          0.3056
   4801CCHOKEC                      0.0001          0.3056
C .....^.....^xxxxxxxxxxxx...............^...............^...............^xxxxx^
C
C <-------- Choke (Input) Impedance (0%)
C
C <---Nodes--><----------><-----------Ohms<-------------mH<-------------uF<--Out
C Bus1->Bus2-><----------><--------------R<--------------L<--------------C     V
  CHOKEATRMNLA                       0.001            0.01                    1
  CHOKEBTRMNLB                       0.001            0.01
  CHOKECTRMNLC                       0.001            0.01
C .....^.....^xxxxxxxxxxxx...............^...............^...............^xxxxx^
$VINTAGE, 0
C
```

$$L_{choke} = \frac{kV^2}{MVA_{drive}} = \frac{0.480^2}{\left(10/1000\right)} * 0.03 = 0.6912\Omega = 183mH$$

```
C <-------- Diode Snubber Circuits (Front-End)
C
C <---Nodes--><---Refer--><-ohms<---mH<---uF<-------------------------------Out
C <-Bus1<-Bus2<-Bus3<-Bus4<----R<----L<----C                                 V
  TRMNLARECPOS             100.0        1.00
  TRMNLBRECPOSTRMNLARECPOS
  TRMNLCRECPOSTRMNLARECPOS
C .....^.....^.....^.....^.....^.....^.....^.................................^
  TRMNLARECNEGTRMNLARECPOS
  TRMNLBRECNEGTRMNLARECPOS
  TRMNLCRECNEGTRMNLARECPOS
C .....^.....^.....^.....^.....^.....^.....^.................................^
C <-------- Connection to positive and negative dc bus
C
C <---Nodes--><---Refer--><-ohms<---mH<---uF<-------------------------------Out
C <-Bus1<-Bus2<-Bus3<-Bus4<----R<----L<----C                                 V
  DIOD1CRECPOS             0.005
  DIOD3CRECPOS             0.005
  DIOD5CRECPOS             0.005
C .....^.....^.....^.....^.....^.....^.....^.................................^
  DIOD1CRECPOS                     0.05
  DIOD3CRECPOS                     0.05
  DIOD5CRECPOS                     0.05
C .....^.....^.....^.....^.....^.....^.....^.................................^
  RECNEGDIOD4A             0.005
  RECNEGDIOD6A             0.005
  RECNEGDIOD2A             0.005
C .....^.....^.....^.....^.....^.....^.....^.................................^
  RECNEGDIOD4A                     0.05
  RECNEGDIOD6A                     0.05
  RECNEGDIOD2A                     0.05
C .....^.....^.....^.....^.....^.....^.....^.................................^
C
C <-------- Connection to power system (diode front-end)
C
C <---Nodes--><---Refer--><-ohms<---mH<---uF<-------------------------------Out
C <-Bus1<-Bus2<-Bus3<-Bus4<----R<----L<----C                                 V
  TRMNLADIOD1A             0.005
  TRMNLBDIOD3A             0.005
  TRMNLCDIOD5A             0.005
C .....^.....^.....^.....^.....^.....^.....^.................................^
  TRMNLADIOD1A                     0.05
  TRMNLBDIOD3A                     0.05
  TRMNLCDIOD5A                     0.05
C .....^.....^.....^.....^.....^.....^.....^.................................^
  DIOD4CTRMNLA             0.005
  DIOD6CTRMNLB             0.005
  DIOD2CTRMNLC             0.005
C .....^.....^.....^.....^.....^.....^.....^.................................^
  DIOD4CTRMNLA                     0.05
  DIOD6CTRMNLB                     0.05
  DIOD2CTRMNLC                     0.05
C .....^.....^.....^.....^.....^.....^.....^.................................^
C
C <-------- Phase-to-Phase Voltage Sampling
C
C <---Nodes--><---Refer--><-ohms<---mH<---uF<-------------------------------Out
C <-Bus1<-Bus2<-Bus3<-Bus4<----R<----L<----C                                 V
  TRMNLATRMNLB            1.0E08                                             2
  TRMNLBTRMNLC            1.0E08
  TRMNLCTRMNLA            1.0E08
C .....^.....^.....^.....^.....^.....^.....^.................................^
C
```

```
C <-------- Starting Resistor
C
C <---Nodes--><---Refer--><-ohms<---mH<---uF<-------------------------------Out
C <-Bus1<-Bus2<-Bus3<-Bus4<----R<----L<----C                                 V
  RECPOSSTARTR             0.750
C .....^.....^.....^.....^.....^.....^.....^.................................^
C
/SWITCH
C
C <-------- Starting Resistor - Shorting Contact
C
C BUS-->BUS--><---TCLOSE<----TOPEN<-------IE<----FLASH<--REQUEST<-----TARGET<--O
  RECPOSSTARTR  40.00E-3 999.9E-03
C .....^.....^.........^.........^.........^.........^.........^...........^...^
C
/BRANCH
C <-------- dc Bus Components
C
C <---Nodes--><---Refer--><-ohms<---mH<---uF<-------------------------------Out
C <-Bus1<-Bus2<-Bus3<-Bus4<----R<----L<----C                                 V
  STARTRDCPLUS             0.001  0.01                                       1
C .....^.....^.....^.....^.....^.....^.....^.................................^
  DCMNUSDCPLUS             42.25
C .....^.....^.....^.....^.....^.....^.....^.................................^
  DCPLUSDCMNUS                      1200.0                                   2
C .....^.....^.....^.....^.....^.....^.....^.................................^
  RECPOS                                 1.0
C .....^.....^.....^.....^.....^.....^.....^.................................^
  RECNEG                                 1.0
C .....^.....^.....^.....^.....^.....^.....^.................................^
  RECNEGDCMNUS             0.001  0.01
C .....^.....^.....^.....^.....^.....^.....^.................................^
C
/SWITCH
C
C <-------- Diodes (front-end)
C
C BUS-->BUS--><------Vig<----Ihold<-------td<---------CLOSEDSame<Grid<Op/Cl<xxOO
11DIOD1ADIOD1C                 0.1
11DIOD3ADIOD3C                 0.1
11DIOD5ADIOD5C                 0.1
C .....^.....^.........^.........^.........^xxxxxxxxx^.....^...^.....^.....^xx^^
11DIOD4ADIOD4C                 0.1
11DIOD6ADIOD6C                 0.1
11DIOD2ADIOD2C                 0.1
C .....^.....^.........^.........^.........^xxxxxxxxx^.....^...^.....^.....^xx^^
C
/BRANCH
C
C <-------- Connection from 480 Volt Bus #2 to dc Drive
C
C <---Nodes--><---Refer--><-Ohms<---mH<---uF<---------------------------------O
C Bus1->Bus2->Bus3->Bus4-><----R<----L<----C                                 V
  200HPA 4802A            0.0001                                             1
  200HPB 4802B            0.0001                                             1
  200HPC 4802C            0.0001                                             1
C .....^.....^.....^.....^.....^.....^.....^xxxxxxxxxxxxxxxxxxxxxxxxxxxxxxxxxx^
C
C <-------- Reference connection
C
C <---Nodes--><---Refer--><-ohms<---mH<---uF<-------------------------------Out
C <-Bus1<-Bus2<-Bus3<-Bus4<----R<----L<----C                                 V
  200HPA                  1.0E08
  200HPB                  1.0E08
  200HPC                  1.0E08
C .....^.....^.....^.....^.....^.....^.....^.................................^
C
```

$$R_{dc} = \frac{V_{dc}^{\ 2}}{P} = \frac{650^2}{10000} = 42.25\Omega$$

```
/SOURCE
C
C <-------- 200 HP Adjustable-Speed Drive (dc Drive, three-phase)
C
C  Harmonic Current Source for 200 HP DC Drive
C  IFL = 240 Amps  I5 = 33.6%, I7 = 1.6%,  I11 = 8.7%,  I13 = 1.2%
C
C <--Bus<I<-----Ampl<-----Freq<----Phase<-------A1<------T1><---Tstart<----Tstop
14200HPA-1     339.4      60.0     -75.0                      50.0E-06     9999.
14200HPA-1       4.1     180.0      28.0                      50.0E-06     9999.
14200HPA-1     114.0     300.0     156.0                      50.0E-06     9999.
14200HPA-1       5.4     420.0      29.0                      50.0E-06     9999.
14200HPA-1      29.5     660.0      49.0                      50.0E-06     9999.
14200HPA-1       4.1     780.0      54.0                      50.0E-06     9999.
14200HPA-1      15.3    1020.0     -57.0                      50.0E-06     9999.
14200HPA-1       4.4    1140.0     -46.0                      50.0E-06     9999.
C .....^.^.........^.........^.........^.........^.........^........^..........^.........^
C
C <--Bus<I<-----Ampl<-----Freq<----Phase<-------A1<------T1><---Tstart<----Tstop
14200HPB-1     339.4      60.0     165.0                      50.0E-06     9999.
14200HPB-1       4.1     180.0      28.0                      50.0E-06     9999.
14200HPB-1     114.0     300.0     -84.0                      50.0E-06     9999.
14200HPB-1       5.4     420.0     -91.0                      50.0E-06     9999.
14200HPB-1      29.5     660.0     169.0                      50.0E-06     9999.
14200HPB-1       4.1     780.0     -66.0                      50.0E-06     9999.
14200HPB-1      15.3    1020.0      63.0                      50.0E-06     9999.
14200HPB-1       4.4    1140.0    -166.0                      50.0E-06     9999.
C .....^.^.........^.........^.........^.........^.........^........^..........^.........^
C
C <--Bus<I<-----Ampl<-----Freq<----Phase<-------A1<------T1><---Tstart<----Tstop
14200HPC-1     339.4      60.0      45.0                      50.0E-06     9999.
14200HPC-1       4.1     180.0      28.0                      50.0E-06     9999.
14200HPC-1     114.0     300.0      36.0                      50.0E-06     9999.
14200HPC-1       5.4     420.0     149.0                      50.0E-06     9999.
14200HPC-1      29.5     660.0     -71.0                      50.0E-06     9999.
14200HPC-1       4.1     780.0     174.0                      50.0E-06     9999.
14200HPC-1      15.3    1020.0    -177.0                      50.0E-06     9999.
14200HPC-1       4.4    1140.0      74.0                      50.0E-06     9999.
C .....^.^.........^.........^.........^.........^.........^........^..........^.........^
C
C <-----------------------------------------------Output Request---------------
C
/OUTPUT
C
C Bus1->Bus2->Bus3->Bus4->Bus5->Bus6->
   12_5A 12_5B 12_5C
   XFMRA XFMRB XFMRC
C .....^.....^.....^.....^.....^.....^
BLANK ENDS BRANCH
BLANK ENDS SWITCH
BLANK ENDS SOURCE
BLANK ENDS OUTPUT
BLANK ENDS PLOT
BEGIN NEW DATA CASE
BLANK END OF ALL DATA CASES
```

480VMOV.DAT

```
C 480 Volt Delta, MCOV 528 V Line-to-Line,  Energy = 3840 Joules
C                 1 Sec TOV = 734 V, MSSPL = 1195 V @ 500 A
/BRANCH
C
C <-------- Connection to Low Voltage MOV
C
C <---Nodes--><---Refer--><-Ohms<---mH<---uF<---------------------------------O
C Bus1->Bus2->Bus3->Bus4-><----R<----L<----C                                  V
   4802A  MOVA              0.10  0.10
   4802B  MOVB              0.10  0.10
   4802C  MOVC              0.10  0.10
C .....^.....^.....^.....^.....^.....^.....^xxxxxxxxxxxxxxxxxxxxxxxxxxxxxxxxxx^
    MOVA  TMPA              0.10                                              1
    MOVB  TMPB              0.10                                              1
    MOVC  TMPC              0.10                                              1
C .....^.....^.....^.....^.....^.....^.....^xxxxxxxxxxxxxxxxxxxxxxxxxxxxxxxxxx^
C
C <-------- Reference Branch
C
C <---Nodes--><---Refer--><-Ohms<---mH<---uF<---------------------------------O
C Bus1->Bus2->Bus3->Bus4-><----R<----L<----C                                  V
    MOVA                                 2.00
    MOVB                                 2.00
    MOVC                                 2.00
C .....^.....^.....^.....^.....^.....^.....^xxxxxxxxxxxxxxxxxxxxxxxxxxxxxxxxxx^
C
C <-------- 480 Volt MOV
C
C <---Nodes--><--Refer--->
C <-Bus1<-Bus2<-Bus3<-Bus4<------------5555.<---------------------------------O
92  TMPA  MOVB                         5555.                                  4
C .....^.....^.....^.....^.....^.......^^^^^.................................^
C
C <------------------Vref<------------------Vflash
                  1195.0                      0.0
C ......................^......................^
C
C <------------------Coef<-------------------Expon<--------------------Vmin
                   500.0                     25.0                       0.5
C ......................^......................^......................^
                   9999.
C ......................^
C <---Nodes--><--Refer--->
C <-Bus1<-Bus2<-Bus3<-Bus4<------------5555.<---------------------------------O
92  TMPB  MOVC                         5555.                                  4
C .....^.....^.....^.....^.....^.......^^^^^.................................^
C
C <------------------Vref<------------------Vflash
                  1195.0                      0.0
C ......................^......................^
C
C <------------------Coef<-------------------Expon<--------------------Vmin
                   500.0                     25.0                       0.5
C ......................^......................^......................^
                   9999.
C ......................^
C <---Nodes--><--Refer--->
C <-Bus1<-Bus2<-Bus3<-Bus4<------------5555.<---------------------------------O
92  TMPC  MOVA                         5555.                                  4
C .....^.....^.....^.....^.....^.......^^^^^.................................^
C
C <------------------Vref<------------------Vflash
                  1195.0                      0.0
C ......................^......................^
C
C <------------------Coef<-------------------Expon<--------------------Vmin
                   500.0                     25.0                       0.5
C ......................^......................^......................^
                   9999.
C ......................^
```